INDEX PAGE for 12" Wide Grates / Covers

- Click on "Item ID" to go to grate page, "Back to Index" will return you to this page.

P12-ADA-USA ..... ADA Compliant Grate, Ductile Iron
P12-BDC ..... Slotted Grate, Black Acid Resistant Epoxy Coated Ductile Iron
P12-BDE ..... Slotted Grate, Black Acid Resistant Epoxy Coated Ductile Iron
P12-BDE-USA ..... Slotted Grate, Black Acid Resistant Epoxy Coated Ductile Iron
P12-BDF ..... Slotted Grate, Black Acid Resistant Epoxy Coated Ductile Iron
P12-BG ..... Slotted Bar Grate, Galvanized Ductile Iron
P12-BG-L ..... Slotted Bar Grate, Galvanized Steel
P12-DC ..... Solid Cover, Ductile Iron
P12-DC-G ..... Solid Cover, Galvanized Ductile Iron
P12-DGC ..... Slotted Grate, Ductile Iron
P12-DGC-USA ..... Slotted Grate, Ductile Iron
P12-DGE ..... Slotted Grate, Ductile Iron
P12-DGE-USA ..... Slotted Grate, Ductile Iron
P12-DGF ..... Slotted Grate, Ductile Iron
P12-FG ..... Fabricated Grate, Galvanized Steel
P12-FS ..... Fabricated Grate, Stainless Steel
P12-GADA-USA ..... ADA Compliant Grate, Galvanized Ductile Iron
P12-GDC ..... Slotted Grate, Galvanized Ductile Iron
P12-GDC-USA ..... Slotted Grate, Galvanized Ductile Iron
P12-GDE ..... Slotted Grate, Galvanized Ductile Iron
P12-GDE-USA ..... Slotted Grate, Galvanized Ductile Iron
P12-GDF ..... Slotted Grate, Galvanized Ductile Iron
P12-GG ..... Slotted Grate, Vinylester Fiberglass
P12-GHPD ..... Heel-Proof Longitudinal Grate, Galvanize Ductile Iron
P12-GHPDE ..... Heel-Proof Longitudinal Grate, Galvanized Ductile Iron
P12-GHPDE-USA ... Heel-Proof Longitudinal Grate, Galvanized Ductile Iron
P12-HPD ..... Heel-Proof Longitudinal Grate, Ductile Iron
P12-HPDE ..... Heel-Proof Longitudinal Grate, Ductile Iron
P12-HPDE-USA ..... Heel-Proof Longitudinal Grate, Ductile Iron
P12-PG ..... Perforated Grate, Galvanized Steel
P12-PGR ..... Raised Perforated Grate, Galvanized Steel
P12-PS ..... Perforated Grate, Stainless Steel
P12-PSR ..... Raised Perforated Grate, Stainless Steel
P12-RFG ..... Reinforced Galvanized Grate, Steel
P12-RFGC ..... Reinforced Galvanized Grate, Steel
P12-RFS ..... Reinforced Grate, Stainless Steel
P12-RFSC ..... Reinforced Grate, Stainless Steel
P12-RPG ..... Reinforced Perforated Grate, Galvanized Steel
P12-RPGC ..... Reinforced Perforated Grate, Galvanized Steel
P12-RPGR ..... Reinforced Raised Perforated Grate, Galvanized Steel
P12-RPGRC ..... Reinforced Raised Perforated Grate, Galvanized
P12-RPSC ..... Reinforced Perforated Grate, Stainless Steel
P12-RPSR ..... Reinforced Raised Perforated Grate, Stainless Steel
P12-RPSRC ..... Reinforced Raised Perforated Grate, Stainless Steel
P12-SBG-L ..... Slotted Bar Grate, Stainless Steel
P12-SSCD ..... Reinforced Cover, Stainless Steel

Supplied By:
TRENCHDRAIN SUPPLY
877-903-7246
www.trenchdrainsupply.com

Zurn Industries, LLC | **Light Commercial Plumbing Products**
1801 Pittsburgh Avenue, Erie, PA U.S.A. 16502 · Ph. 855-663-9876, Fax 814-454-7929
In Canada | **Zurn Industries Limited**
3544 Nashua Drive, Mississauga, Ontario L4V 1L2 · Ph. 905-405-8272, Fax 905-405-1292
www.zurn.com

Rev. AA
Date: 01/11/16
C.N. No. 133793
Form # FT649

P12-ADA-USA

12 [305] Wide Domestic Grate

Dimensional data (Imperial and [Metric]) are subject to manufacturing tolerances and change without notice. Linear (in[mm]), area (in²[cm²], and weight (lbs[kg])

Back to Index

Please Check ✓	Item No.	Part Number	Item I.D.
	1	84257	P12-ADA-USA

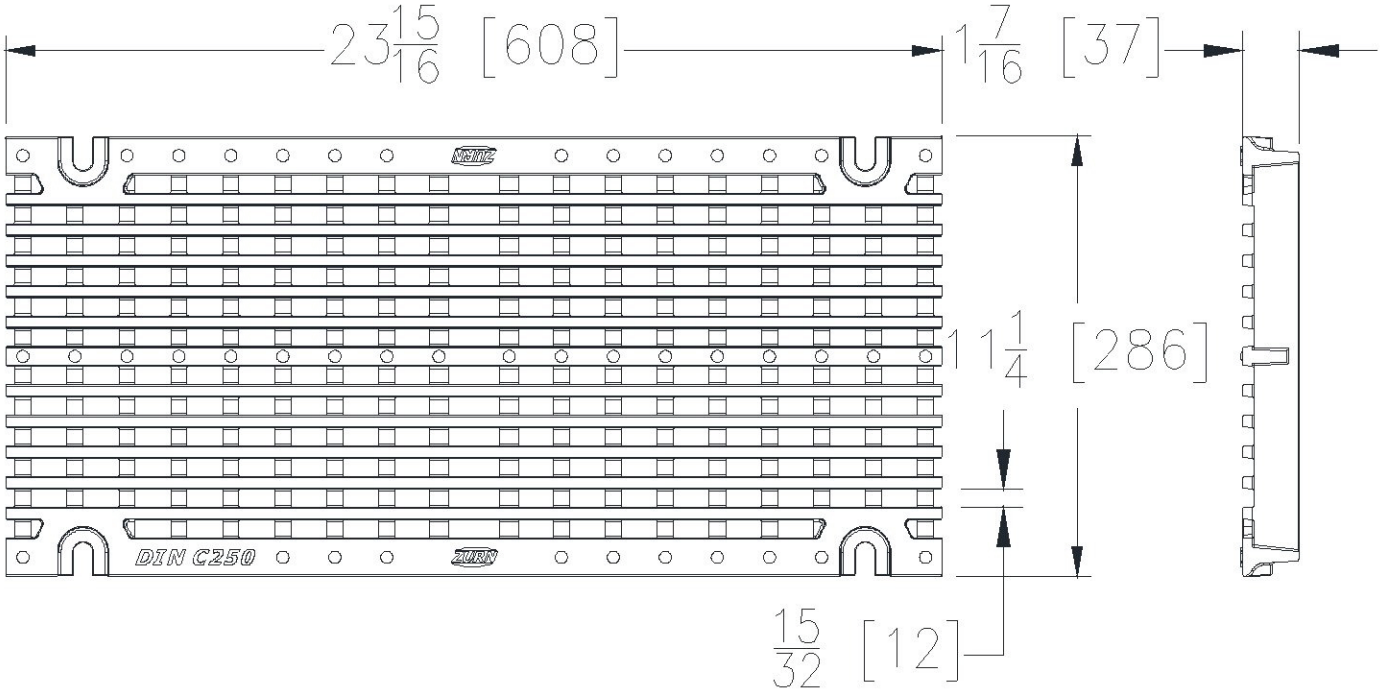

ADA-USA GRATE ENGINEERING SPECIFICATION: The Zurn P12-ADA-USA Ductile Iron Grate, is 11-1/4" [286mm] wide X 23-15/16" [608mm] long, weighing 15.6 lbs per linear foot [23kg/m]. The grate has an open area of 65.2 in² per linear foot [1380 cm² /m], DIN Rating of C, ANSI Rating of Heavy-Duty, ADA compliant, and H-20 Load Rated. Ductile Iron conforms to ASTM A536 Grade 80-55-06.

ADA-USA- ADA Compliant	
Material:	Ductile Iron
DIN Rating:	Class C
Weight:	15.6 lbs/ft. [23kg/m]
Open Area:	65.2 sq. in²/ft.[1380 cm²/m]
ANSI Rating:	Heavy-Duty
Application:	Roadway, ADA
Slot Width/Hole Size: 15/32 [12]	
ADA:	Yes
H-20:	Yes
FAA:	No

Zurn Industries, LLC | **Light Commercial Plumbing Products**
1801 Pittsburgh Avenue, Erie, PA U.S.A. 16502 · Ph. 855-663-9876, Fax 814-454-7929
In Canada | **Zurn Industries Limited**
3544 Nashua Drive, Mississauga, Ontario L4V 1L2 · Ph. 905-405-8272, Fax 905-405-1292
www.zurn.com

Rev. AA
Date: 01/11/16
C.N. No. 133793
Form # FT649

P12-BDC

12 [305] Wide Grate

Dimensional data (Imperial and [Metric]) are subject to manufacturing tolerances and change without notice. Linear (in[mm]), area (in²[cm²], and weight (lbs[kg])

Back to Index

Please Check ✓	Item No.	Part Number	Item I.D.
	2	84225	P12-BDC

Supercedes
65913

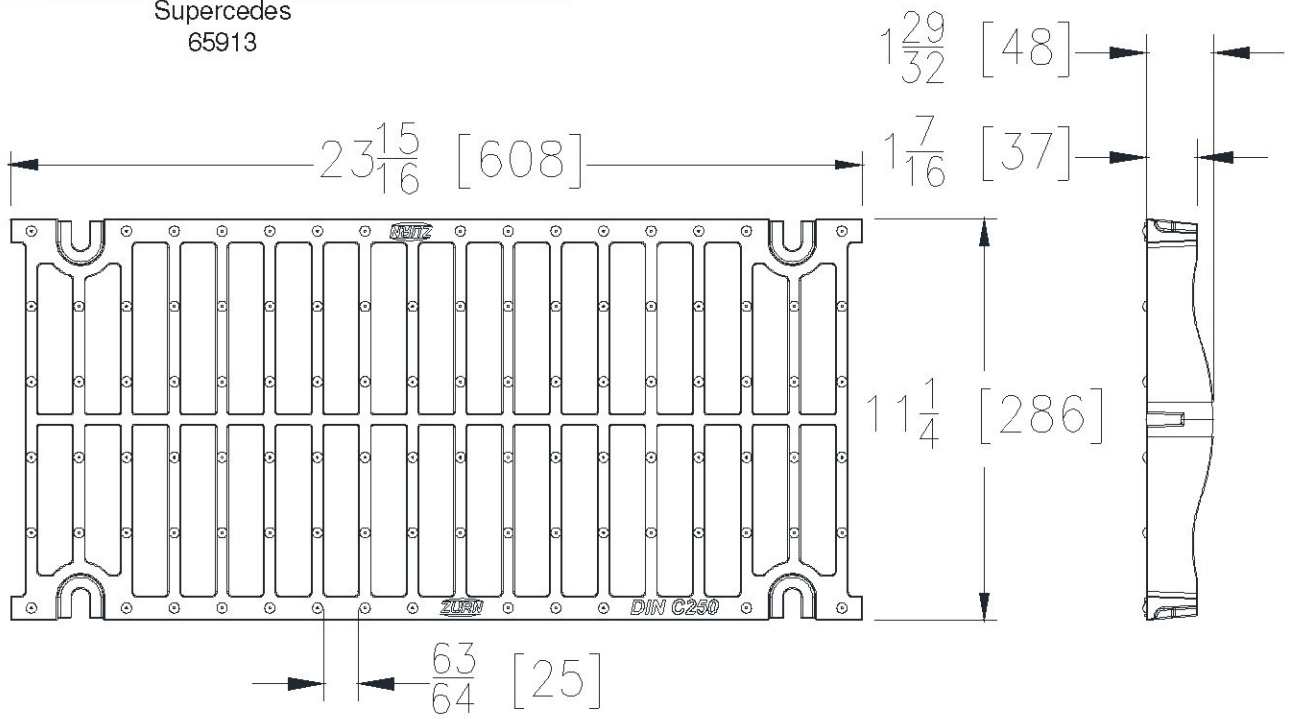

BDC GRATE ENGINEERING SPECIFICATION: The Zurn P12-BDC Black Acid Resistant Epoxy Coated Ductile Iron Slotted Grate, is 11-1/4" [286mm] wide X 23-15/16" [608mm] long, weighing 14.7 lbs per linear foot [22 kg/m]. The grate has an open area of 86.7 in² per linear foot [1835cm²/m], DIN Rating of C, ANSI Rating of Heavy-Duty, and H-20 Load Rated. Ductile Iron conforms to ASTM A536 Grade 80-55-06.

BDC -Black Acid Resistant Ductile	
Material:	Ductile Iron
DIN Rating:	Class C
Weight:	14.7 lbs/ft. [22 kg/m]
Open Area:	86.7 in²/ft.[1835 cm²/m]
ANSI Rating:	Heavy-Duty
Application:	Vehicle & Truck
Slot Width/Hole Size: 63/64 [25]	
ADA:	No
H-20:	Yes
FAA:	No

P12-BDE

12 [305] Wide Grate

Dimensional data (Imperial and [Metric]) are subject to manufacturing tolerances and change without notice. Linear (in[mm]), area (in²[cm²], and weight (lbs[kg])

Back to Index

Please Check ✓	Item No.	Part Number	Item I.D.
	3	82038	P12-BDE

Supercedes
63958

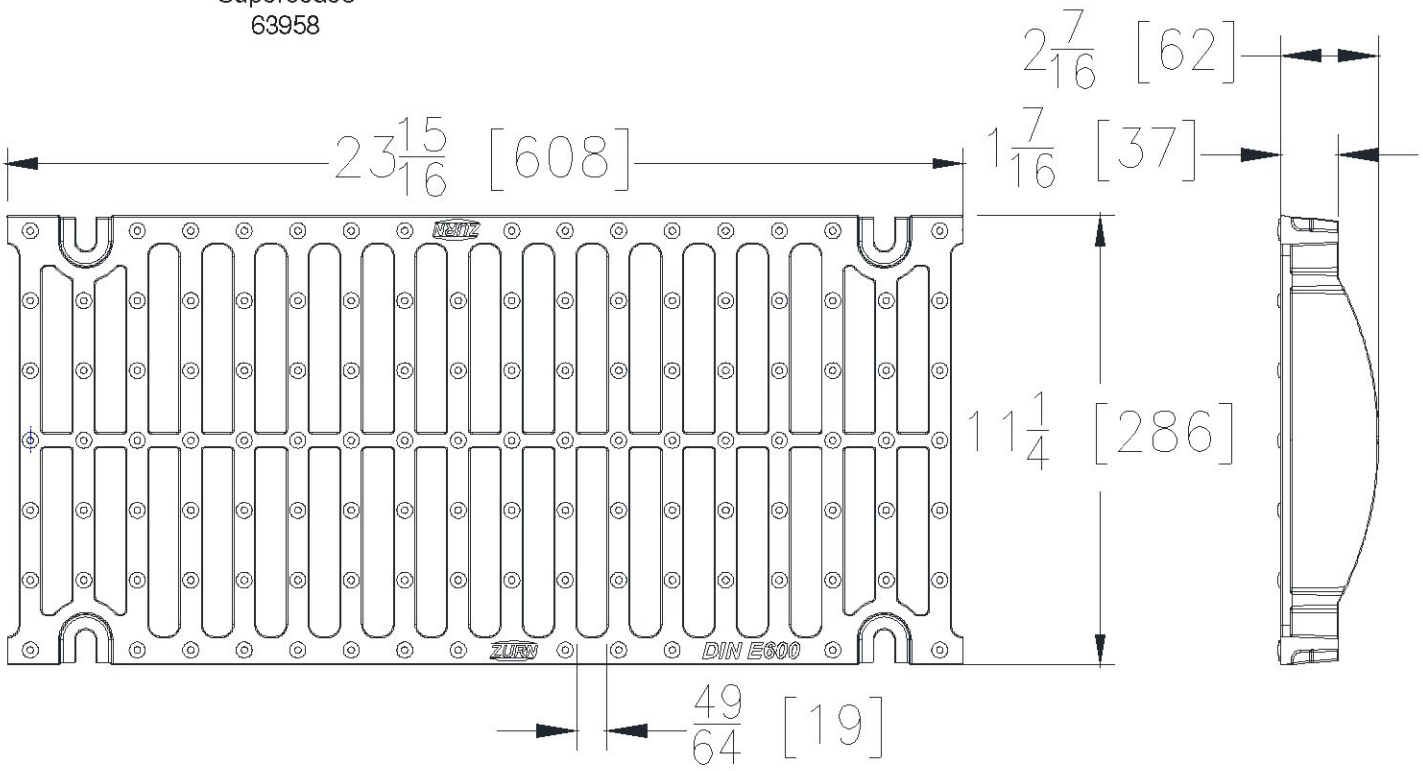

BDE GRATE ENGINEERING SPECIFICATION: The Zurn P12-BDE Black Acid Resistant Epoxy Coated Ductile Iron Slotted Grate, is 11-1/4" [286mm] wide X 23-15/16" [608mm] long, weighing 19.8 lbs per linear foot [29 kg/m]. The grate has an open area of 60.3 in² per linear foot [1276 cm²/m], DIN Rating of E, ANSI Rating of Special-Duty, H-20 Load Rated, and FAA Load Rated. Ductile Iron conforms to ASTM A536 Grade 80-55-06.

BDE -Black Acid Resistant Ductile	
Material:	Ductile Iron
DIN Rating:	Class E
Weight:	19.8 lbs/ft. [29 kg/m]
Open Area:	60.3 in²/ft. [1276 cm²/m]
ANSI Rating:	Special-Duty
Application: Hard Wheel & Truck	
Slot Width/Hole Size: 49/64 [19]	
ADA:	No
H-20:	Yes
FAA:	Yes

P12-BDE-USA

12 [305] Wide Domestic Grate

Dimensional data (Imperial and [Metric]) are subject to manufacturing tolerances and change without notice. Linear (in[mm]), area (in²[cm²], and weight (lbs[kg])

Back to Index

Please Check ✓	Item No.	Part Number	Item I.D.
	4	84220	P12-BDE-USA

Supercedes
63958

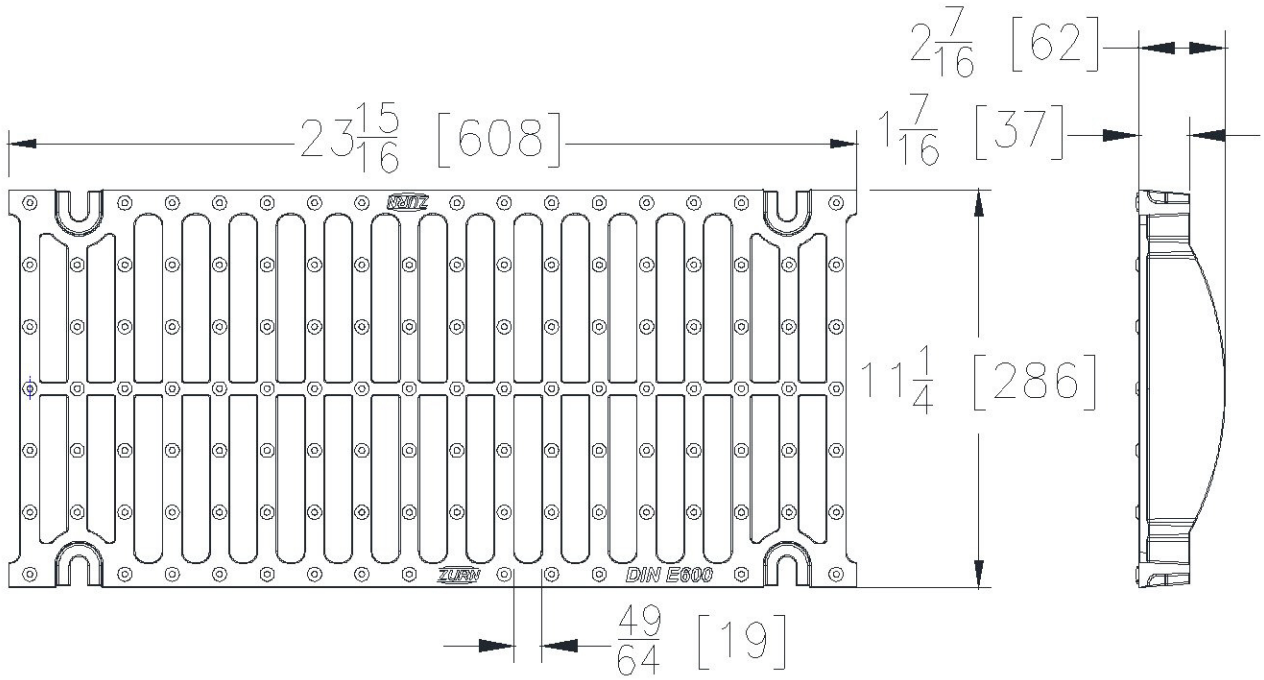

BDE-USA GRATE ENGINEERING SPECIFICATION: The Zurn P12-BDE-USA Black Acid Resistant Epoxy Coated Ductile Iron Slotted Grate, is 11-1/4" [286mm] wide X 23-15/16" [608mm] long, weighing 19.5 lbs per linear foot [29 kg/m]. The grate has an open area of 60.3 in² per linear foot [1276 cm²/m], DIN Rating of E, ANSI Rating of Special-Duty, H-20 Load Rated, and FAA Load Rated. Ductile Iron conforms to ASTM A536 Grade 80-55-06.

BDE-USA -Black Acid Resistant Ductile	
Material:	Ductile Iron
DIN Rating:	Class E
Weight:	19.5 lbs/ft. [29 kg/m]
Open Area:	60.3 in²/ft. [1276 cm²/m]
ANSI Rating:	Special-Duty
Application:	Hard Wheel & Truck
Slot Width/Hole Size:	49/64 [19]
ADA:	No
H-20:	Yes
FAA:	Yes

P12-BDF

12 [305] Wide Grate

Dimensional data (Imperial and [Metric]) are subject to manufacturing tolerances and change without notice. Linear (in[mm]), area (in²[cm²], and weight (lbs[kg])

Back to Index

Please Check ✓	Item No.	Part Number	Item I.D.
	5	65868	P12-BDF

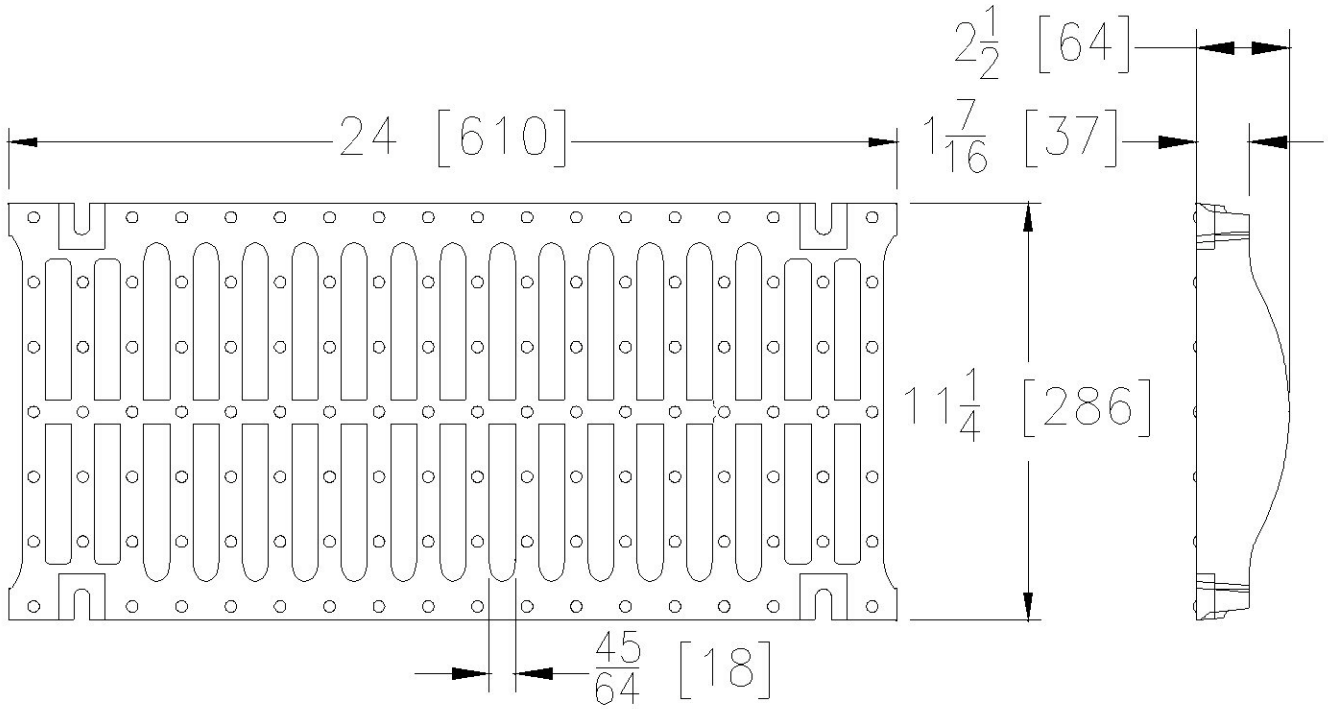

BDF GRATE ENGINEERING SPECIFICATION: The Zurn P12-BDF Black Acid Resistant Epoxy Coated Ductile Iron Slotted Grate, is 11-1/4" [286mm] wide X 24" [610mm] long, weighing 26 lbs per linear foot [39 kg/m]. The grate has an open area of 54 in² per linear foot [1143 cm²/m], DIN Rating of F, ANSI Rating of Special-Duty, H-20 Load Rated, and FAA Load Rated. Ductile Iron conforms to ASTM A536 Grade 80-55-06.

BDF - Black Acid Resistant Ductile	
Material:	Ductile Iron
DIN Rating:	Class F
Weight:	26 lbs/ft. [39 kg/m]
Open Area:	54 in²/ft. [1143 cm²/m]
ANSI Rating:	Special-Duty
Application:	Dynamic loads
Slot Width/Hole Size: 45/64 [18]	
ADA:	No
H-20:	Yes
FAA:	Yes

P12-BG

12 [305] Wide Bar Grate

Dimensional data (Imperial and [Metric]) are subject to manufacturing tolerances and change without notice. Linear (in[mm]), area (in²[cm²], and weight (lbs[kg])

Back to Index

Please Check ✓	Item No.	Part Number	Item I.D.
	6	62230	P12-BG

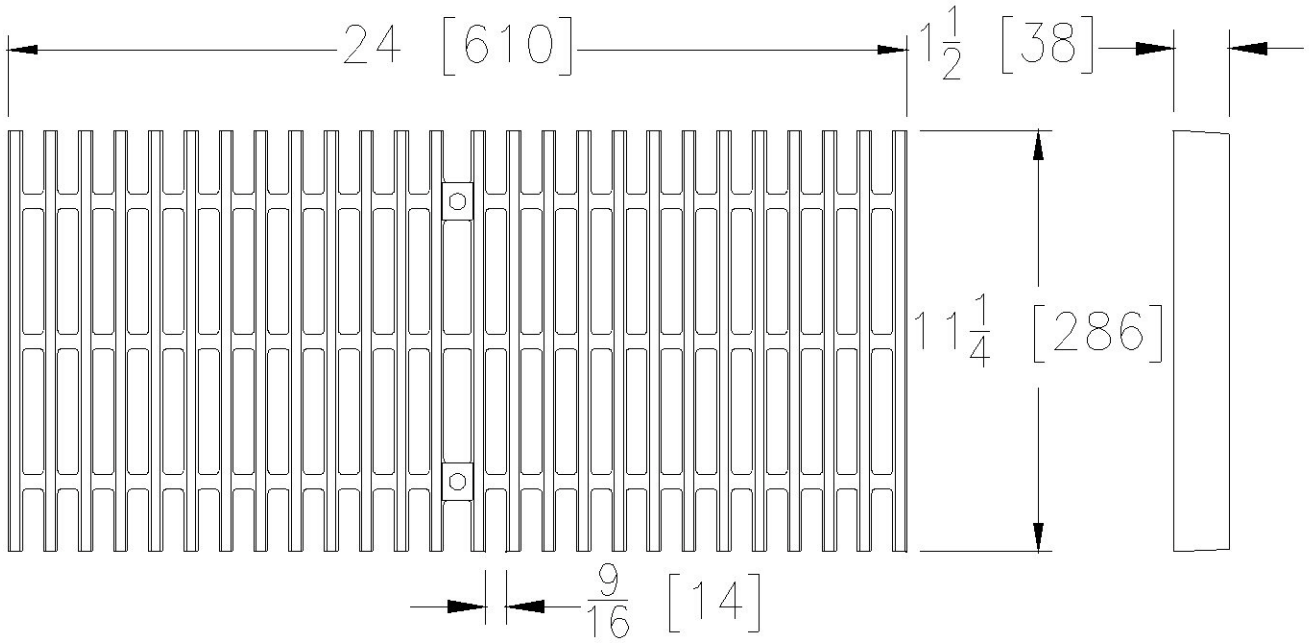

BG GRATE ENGINEERING SPECIFICATION: The Zurn P12-BG Galvanized Ductile Iron Slotted Bar Grate, is 11-1/4" [286mm] wide X 24" [610mm] long, weighing 19.7 lbs per linear foot [29 kg/m]. The grate has an open area of 73.9 in² per linear foot [1564 cm²/m] , DIN Rating of D, ANSI Rating of Heavy-Duty, and H-20 Load Rated. Ductile Iron conforms to ASTM A536 Grade 80-55-06. Galvanizing (hot dip) conforms to ASTM specification A123.

BG - Galvanized Bar Grate	
Material: Galvanized Ductile Iron	
DIN Rating:	Class D
Weight:	19.7 lbs/ft. [29 kg/m]
Open Area:	73.9 in²/ft.[1564 cm²/m]
ANSI Rating:	Heavy-Duty
Application: Hard Wheel & Truck	
Slot Width/Hole Size: 9/16 [14]	
ADA:	No
H-20:	Yes
FAA:	No

P12-BG-L

12 [305] Wide Bar Grate

Dimensional data (Imperial and [Metric]) are subject to manufacturing tolerances and change without notice. Linear (in[mm]), area (in²[cm²], and weight (lbs[kg])

Back to Index

Please Check ✓	Item No.	Part Number	Item I.D.
	7	94015	P12-BG-L

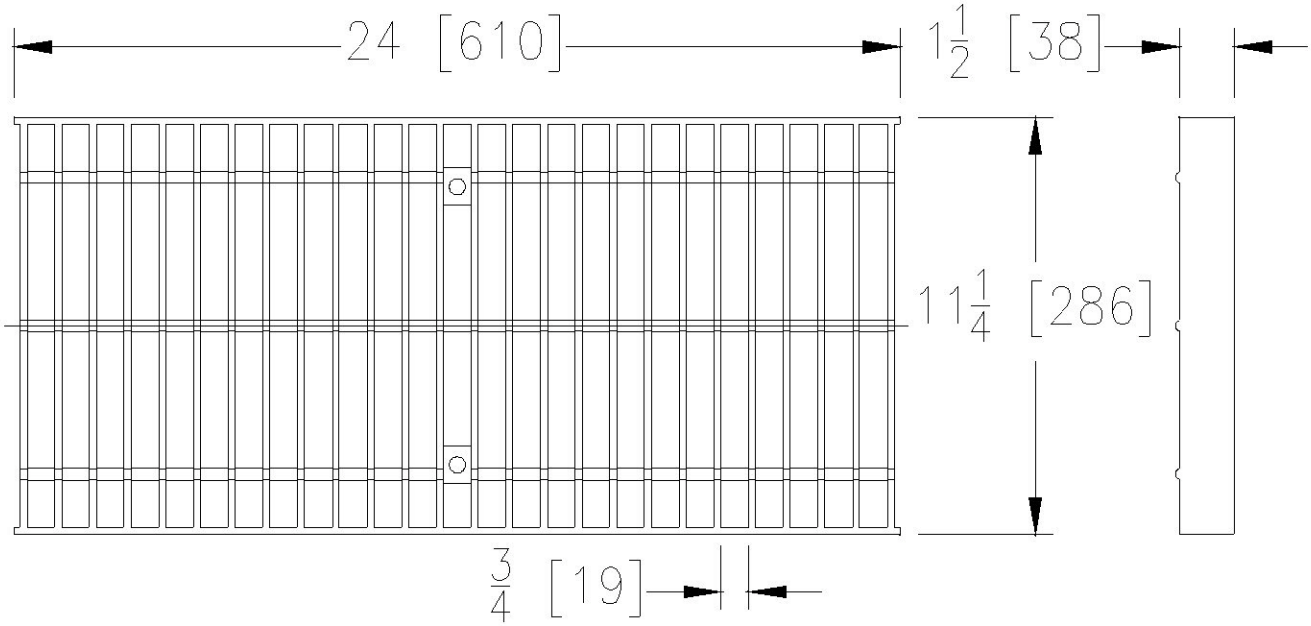

BG-L GRATE ENGINEERING SPECIFICATION: The Zurn P12-BG-L Galvanized Steel Slotted Bar Grate, is 11-1/4" [286mm] wide X 24" [610mm] long, weighing 13.9 lbs per linear foot [21 kg/m]. The grate has an open area of 101.9 in² per linear foot [2157 cm²/m], DIN Rating of D, and ANSI Rating of Heavy-Duty. Galvanizing (hot dip) conforms to ASTM specification A123 and Carbon Steel conforms to ASTM specification A36.

BG-L - Galvanized Bar Grate	
Material: Galvanized Steel	
DIN Rating:	Class D
Weight:	13.9 lbs/ft. [21 kg/m]
Open Area:	101.9 in²/ft. [2157 cm²/m]
ANSI Rating:	Heavy-Duty
Application:	Hard Wheel & Truck
Slot Width/Hole Size: 3/4 [19]	
ADA:	No
H-20:	Yes
FAA:	No

P12-DC

12 [305] Wide Cover

Dimensional data (Imperial and [Metric]) are subject to manufacturing tolerances and change without notice. Linear (in[mm]), area (in²[cm²], and weight (lbs[kg])

Back to Index

Please Check ✓	Item No.	Part Number	Item I.D.
	8	66352	P12-DC

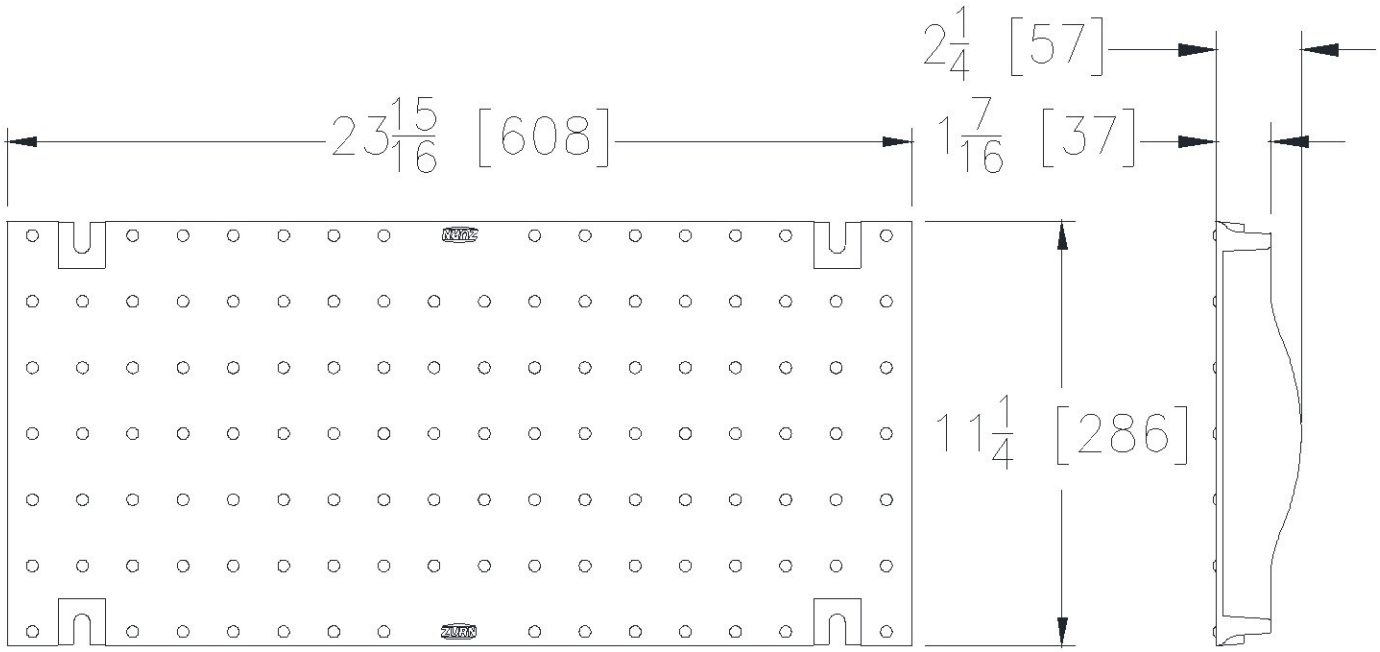

DC GRATE ENGINEERING SPECIFICATION: The Zurn P12-DC Ductile Iron Solid Cover, is 11-1/4" [286mm] wide X 23-15/16" [608mm] long, weighing 27.9 lbs per linear foot [42 kg/m]. The solid ductile iron cover has a DIN Rating of E, ANSI Rating of Special-Duty, ADA Compliant, H-20 Load Rated and FAA Load Rated. Ductile Iron conforms to ASTM A536 Grade 80-55-06.

DC - Solid Cover Ductile	
Material:	Ductile Iron
DIN Rating:	Class E
Weight:	27.9 lbs/ft. [42 kg/m]
Open Area:	N/A
ANSI Rating:	Special-Duty
Application:	Hard Wheel Loads
Slot Width/Hole Size: N/A	
ADA:	Yes
H-20:	Yes
FAA:	Yes

P12-DC-G

12 [305] Wide Cover

Dimensional data (Imperial and [Metric]) are subject to manufacturing tolerances and change without notice. Linear (in[mm]), area (in²[cm²], and weight (lbs[kg])

Back to Index

Please Check ✓	Item No.	Part Number	Item I.D.
	9	66352	P12-DC-G

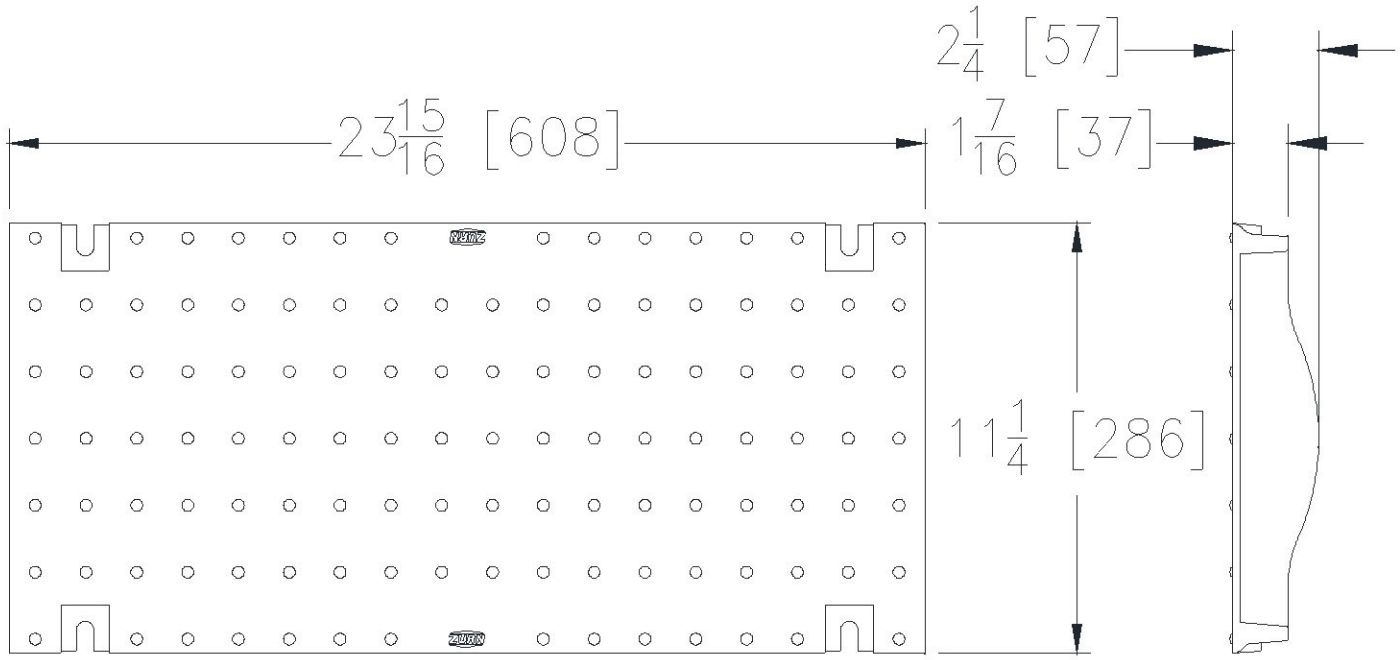

DC-G GRATE ENGINEERING SPECIFICATION: The Zurn P12-DC-G Galvanized Ductile Iron Solid Cover, is 11-1/4" [286mm] wide X 23-15/16" [608mm] long, weighing 27.9 lbs per linear foot [42 kg/m]. The solid ductile iron cover has a DIN Rating of E, ANSI Rating of Special-Duty, ADA Compliant, H-20 Load Rated, and FAA Load Rated. Ductile Iron conforms to ASTM A536 Grade 80-55-06. Galvanizing (hot dip) conforms to ASTM specification A123.

DC-G - Solid Cover Galvanized Ductile	
Material:	Galvanized Ductile Iron
DIN Rating:	Class E
Weight:	27.9 lbs/ft. [42 kg/m]
Open Area:	N/A
ANSI Rating:	Special-Duty
Application:	Hard Wheel Loads
Slot Width/Hole Size: N/A	
ADA:	Yes
H-20:	Yes
FAA:	Yes

P12-DGC

12 [305] Wide Grate

Dimensional data (Imperial and [Metric]) are subject to manufacturing tolerances and change without notice. Linear (in[mm]), area (in²[cm²], and weight (lbs[kg])

Back to Index

Please Check ✓	Item No.	Part Number	Item I.D.
	10	84225	P12-DGC

Supersedes
65913

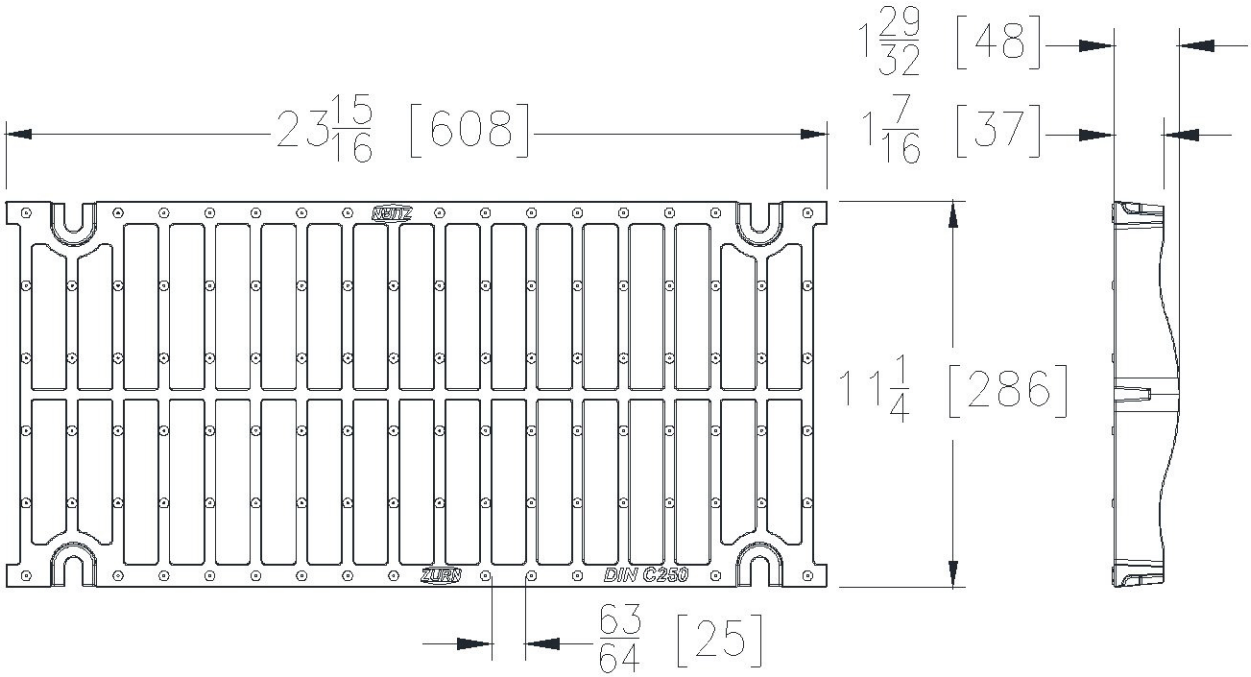

DGC GRATE ENGINEERING SPECIFICATION: The Zurn P12-DGC Ductile Iron Slotted Grate, is 11-1/4" [286mm] wide X 23-15/16" [610mm] long, weighing 14.7 lbs per linear foot [22 kg/m]. The grate has an open area of 86.7 in² per linear foot [1835 cm²/m], DIN Rating of C, ANSI Rating of Heavy-Duty, and H-20 Load Rated. Ductile Iron conforms to ASTM A536 Grade 80-55-06.

DGC -Ductile Iron	
Material:	Ductile Iron
DIN Rating:	Class C
Weight:	14.7 lbs/ft. [22 kg/m]
Open Area:	86.7 in²/ft. [1835 cm²/m]
ANSI Rating:	Heavy-Duty
Application:	Vehicle & Truck
Slot Width/Hole Size: 63/64 [25]	
ADA:	No
H-20:	Yes
FAA:	No

P12-DGC-USA

12 [305] Wide Domestic Grate

Dimensional data (Imperial and [Metric]) are subject to manufacturing tolerances and change without notice. Linear (in[mm]), area (in²[cm²], and weight (lbs[kg])

Back to Index

Please Check ✓	Item No.	Part Number	Item I.D.
	11	84225	P12-DGC-USA

Supersedes
65913

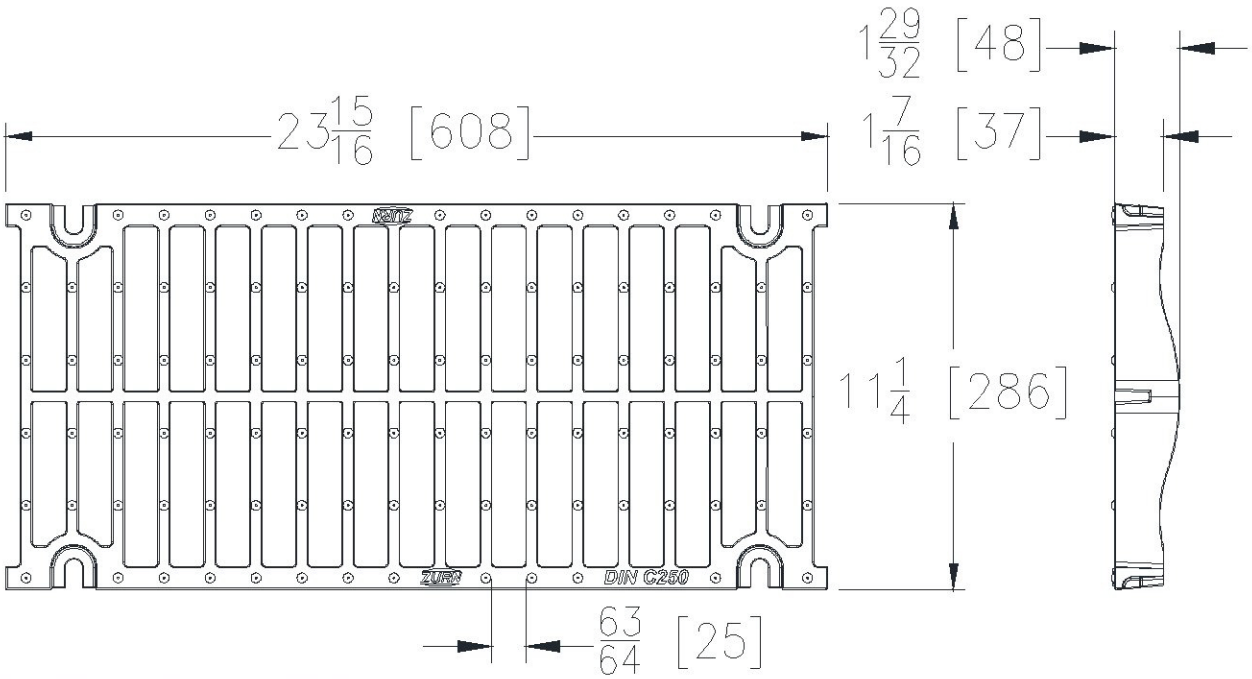

DGC-USA GRATE ENGINEERING SPECIFICATION: The Zurn P12-DGC-USA Ductile Iron Slotted Grate, is 11-1/4" [286mm] wide X 23-15/16" [608 mm] long, weighing 14.7 lbs per linear foot [22 kg/m]. The grate has an open area of 86.7 in² per linear foot [1835 cm²/m], DIN Rating of C, ANSI Rating of Heavy-Duty, and H-20 Load Rated. Ductile Iron conforms to ASTM A536 Grade 80-55-06.

DGC-USA -Ductile Iron	
Material:	Ductile Iron
DIN Rating:	Class C
Weight:	14.7 lbs/ft. [22 kg/m]
Open Area:	86.7 in²/ft. [1835 cm²/m]
ANSI Rating:	Heavy-Duty
Application:	Vehicle & Truck
Slot Width/Hole Size: 63/64 [25]	
ADA:	No
H-20:	Yes
FAA:	No

P12-DGE

12 [305] Wide Grate

Dimensional data (Imperial and [Metric]) are subject to manufacturing tolerances and change without notice. Linear (in[mm]), area (in²[cm²], and weight (lbs[kg])

Back to Index

Please Check ✓	Item No.	Part Number	Item I.D.
	12	82038	P12-DGE

Supersedes
63958

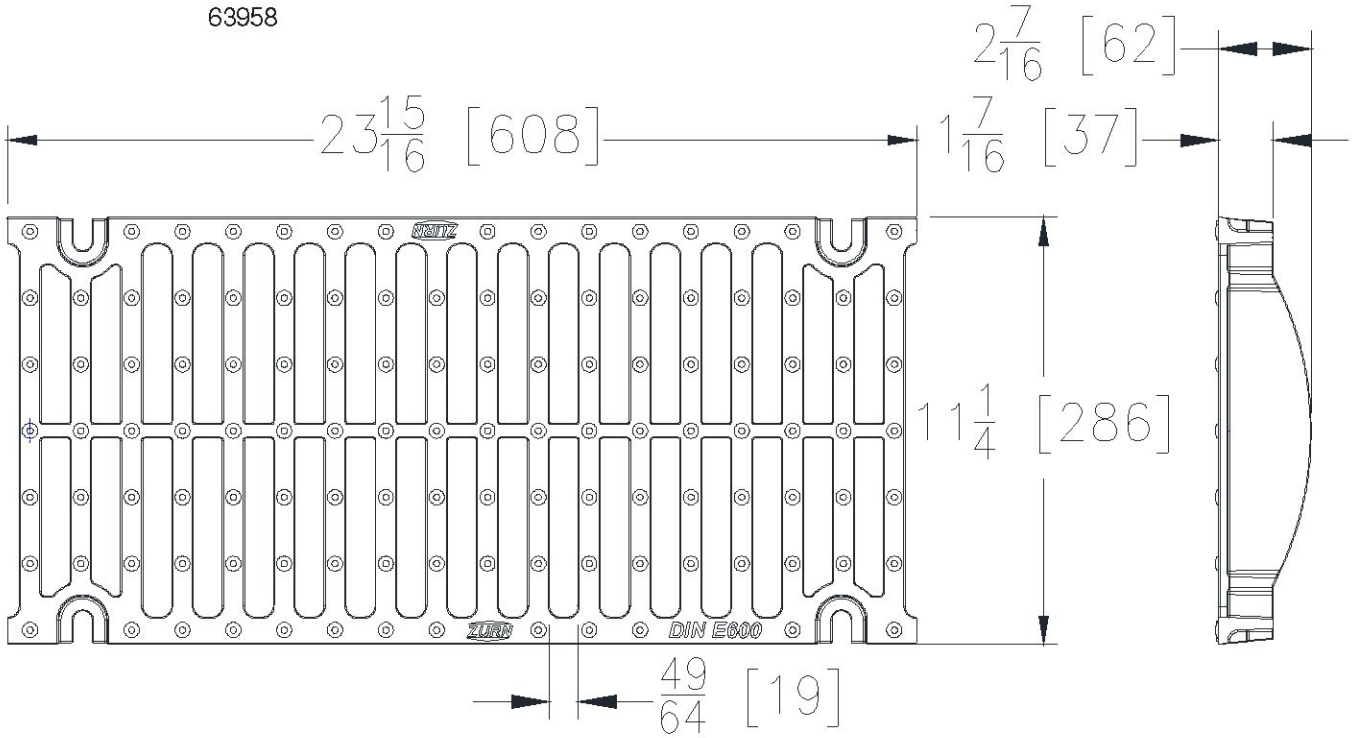

DGE GRATE ENGINEERING SPECIFICATION: The Zurn P12-DGE Ductile Iron Slotted Grate, is 11-1/4" [286mm] wide X 23-15/16" [608 mm] long, weighing 19.8 lbs per linear foot [29 kg/m]. The grate has an open area of 60.3 in² per linear foot [1276 cm²/m], DIN Rating of E, ANSI Rating of Special-Duty, H-20 Load Rated, and FAA Load Rated. Ductile Iron conforms to ASTM A536 Grade
80-55-06.

DGE - Ductile Iron Slotted	
Material:	Ductile Iron
DIN Rating:	Class E
Weight:	19.8 lbs/ft. [29 kg/m]
Open Area:	60.3 in²/ft. [1276 cm²/m]
ANSI Rating:	Special-Duty
Application: Hard Wheel & Truck	
Slot Width/Hole Size: 49/64 [19]	
ADA:	No
H-20:	Yes
FAA:	Yes

P12-DGE-USA

12 [305] Wide Domestic Grate

Dimensional data (Imperial and [Metric]) are subject to manufacturing tolerances and change without notice. Linear (in[mm]), area (in²[cm²], and weight (lbs[kg])

Back to Index

Please Check ✓	Item No.	Part Number	Item I.D.
	13	84220	P12-DGE-USA

Supersedes
63958

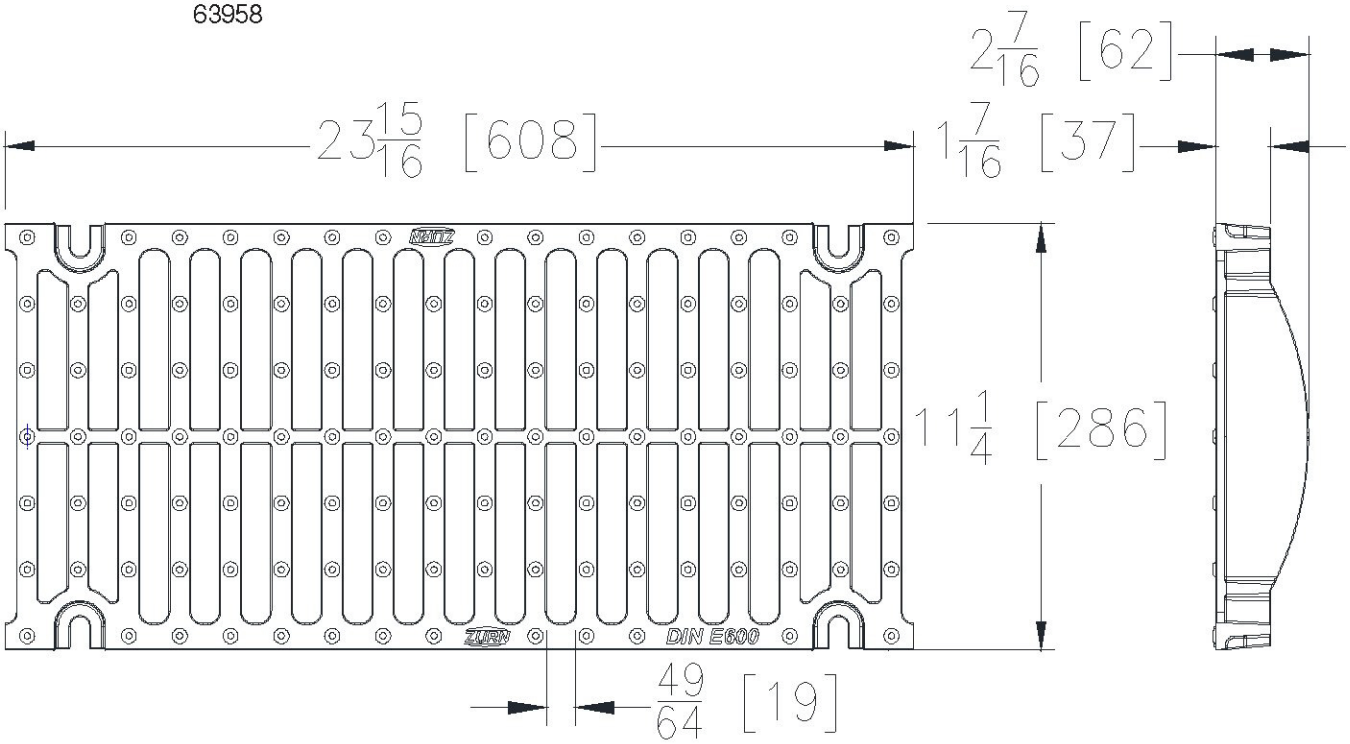

DGE-USA GRATE ENGINEERING SPECIFICATION: The Zurn P12-DGE-USA Ductile Iron Slotted Grate, is 11-1/4" [286mm] wide X 23-15/16" [608mm] long, weighing 19.5 lbs per linear foot [29 kg/m]. The grate has an open area of 60.3 in² per linear foot [1276 cm²/m], DIN Rating of E, ANSI Rating of Special-Duty, H-20 Load Rated, and FAA Load Rated. Ductile Iron conforms to ASTM A536 Grade 80-55-06.

DGE-USA - Ductile Iron Slotted	
Material:	Ductile Iron
DIN Rating:	Class E
Weight:	19.5 lb/ft. [29 kg/m]
Open Area:	60.3 in²/ft. [1276 cm²/m]
ANSI Rating:	Special-Duty
Application:	Hard Wheel & Truck
Slot Width/Hole Size: 49/64 [19]	
ADA:	No
H-20:	Yes
FAA:	Yes

P12-DGF

12 [305] Wide Grate

Dimensional data (Imperial and [Metric]) are subject to manufacturing tolerances and change without notice. Linear (in[mm]), area (in²[cm²], and weight (lbs[kg])

Back to Index

Please Check ✓	Item No.	Part Number	Item I.D.
	14	65868	P12-DGF

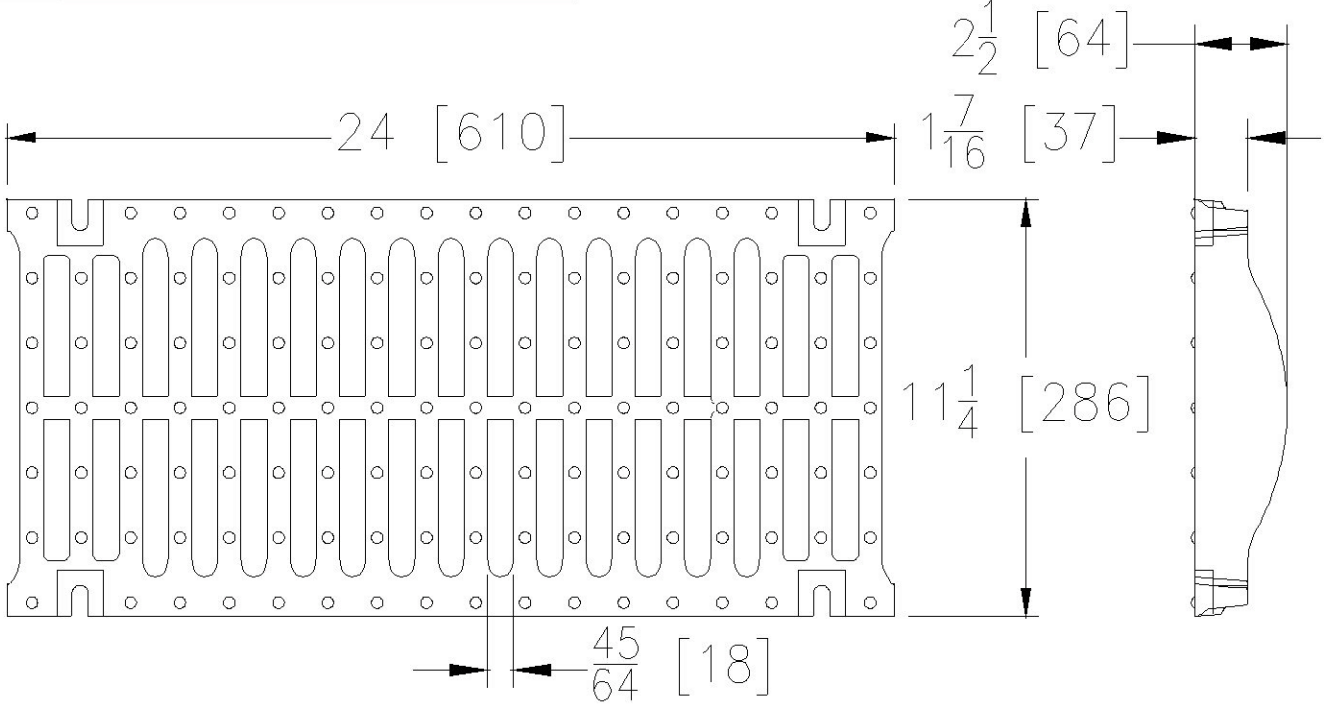

DGF GRATE ENGINEERING SPECIFICATION: The Zurn P12-DGF Ductile Iron Slotted Grate, is 11-1/4" [286mm] wide X 24" [610mm] long, weighing 26 lbs per linear foot [39 kg/m]. The grate has an open area of 54 in² per linear foot [1143 cm²/m], DIN Rating of F, ANSI Rating of Special-Duty, H-20 Load Rated, and FAA Load Rated. Ductile Iron conforms to ASTM A536 Grade 80-55-06.

DGF - Ductile Iron Slotted	
Material:	Ductile Iron
DIN Rating:	Class F
Weight:	26 lbs/ft. [39 kg/m]
Open Area:	54 in²/ft. [1143 cm²/m]
ANSI Rating:	Special-Duty
Application:	Dynamic loads
Slot Width/Hole Size: 45/64 [18]	
ADA:	No
H-20:	Yes
FAA:	Yes

P12-FG

12 [305] Wide Domestic Grate

Dimensional data (Imperial and [Metric]) are subject to manufacturing tolerances and change without notice. Linear (in[mm]), area (in²[cm²], and weight (lbs[kg])

Back to Index

Please Check ✓	Item No.	Part Number	Item I.D.
	15	61019	P12-FG

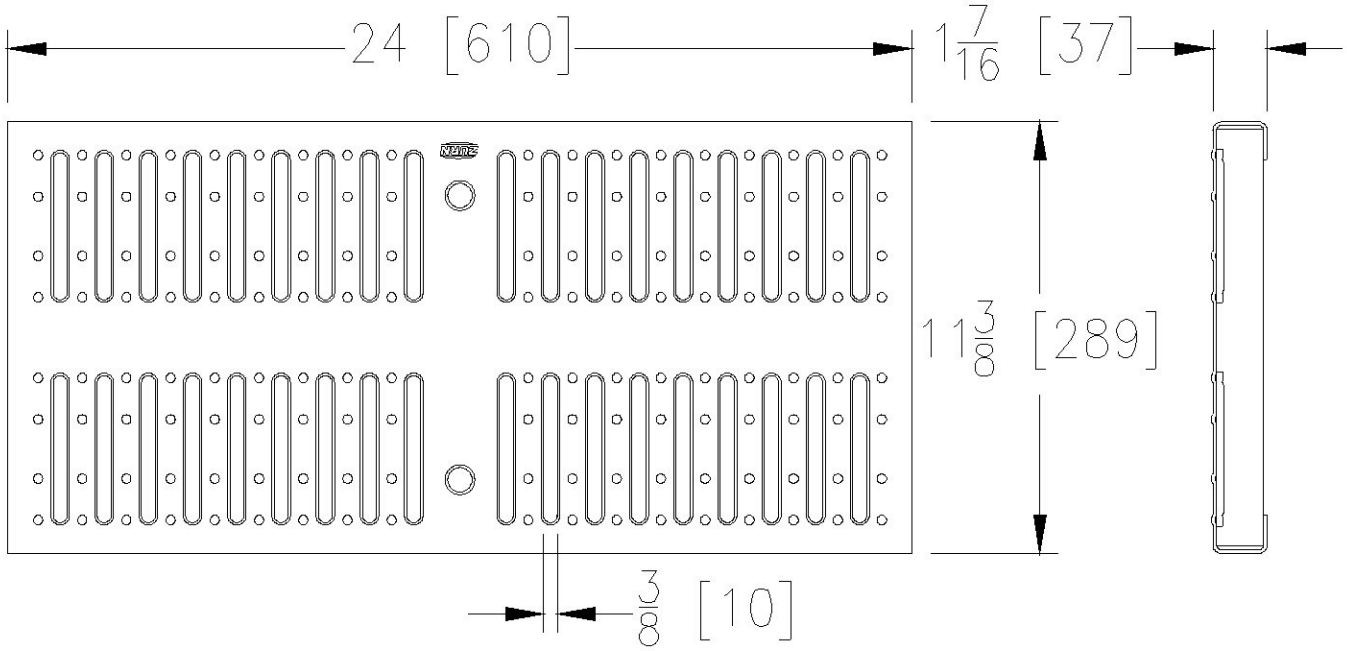

FG GRATE ENGINEERING SPECIFICATION: The Zurn P12-FG Fabricated Galvanized Steel, is 11-3/8" [289mm] wide X 24" [610mm] long, weighing 7.7 lbs per linear foot [11 kg/m]. The grate has an open area of 25.6 in² per linear foot [542 cm²/m], DIN Rating of A, and ANSI Rating of Light-Duty. Carbon Steel conforms to ASTM A36. Galvanized Skin conforms to ASTM Specification A653, Galvanized Coating designation G60, minimum spangle. For ADA compliance elongated openings must be place perpendicular to the dominant direction of travel per ADA guidlines section.

MADE IN THE USA

FG - Fabricated Galvanized	
Material:	Galvanized Steel
DIN Rating:	Class A
Weight:	7.7 lbs/ft. [11 kg/m]
Open Area:	25.6 in²/ft. [542 cm²/m]
ANSI Rating:	Light-Duty
Application:	Pedestrian
Slot Width/Hole Size: 3/8 [10]	
ADA:	Yes
H-20:	No
FAA:	No

P12-FS

12 [305] Wide Domestic Grate

Dimensional data (Imperial and [Metric]) are subject to manufacturing tolerances and change without notice. Linear (in[mm]), area (in²[cm²], and weight (lbs[kg])

Back to Index

Please Check ✓	Item No.	Part Number	Item I.D.
	16	61019	P12-FS

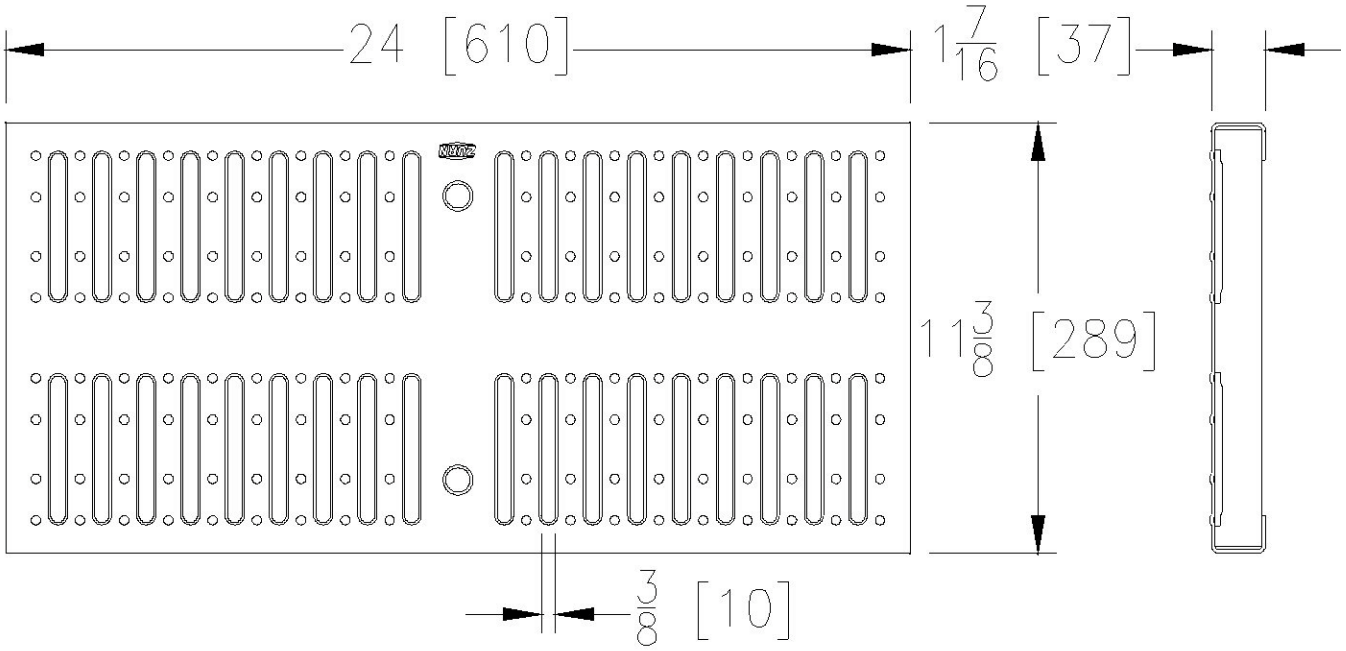

FS GRATE ENGINEERING SPECIFICATION: The Zurn P12-FS Fabricated Stainless Steel, is 11-3/8" [289mm] wide X 24" [610mm] long, weighing 7.9 lbs per linear foot [12 kg/m]. The grate has an open area of 25.6 in² per linear foot [542 cm²/m], DIN Rating of A, and ANSI Rating of Light-Duty. Stainless Steel conforms to ASTM A240 grade CF8 (Type 304 or 316 by request). For ADA compliance elongated openings must be place perpendicular to the dominant direction of travel per ADA guidlines section.

FS - Fabricated Slotted	
Material:	Stainless Steel
DIN Rating:	Class A
Weight:	7.9 lbs/ft. [12 kg/m]]
Open Area:	25.6 in²/ft. [542 cm²/m]
ANSI Rating:	Light-Duty
Application:	Pedestrian
Slot Width/Hole Size: 3/8 [10]	
ADA:	Yes
H-20:	No
FAA:	No

MADE IN THE USA

Zurn Industries, LLC | **Light Commercial Plumbing Products**
1801 Pittsburgh Avenue, Erie, PA U.S.A. 16502 · Ph. 855-663-9876, Fax 814-454-7929
In Canada | **Zurn Industries Limited**
3544 Nashua Drive, Mississauga, Ontario L4V 1L2 · Ph. 905-405-8272, Fax 905-405-1292
www.zurn.com

Rev. AA
Date: 01/11/16
C.N. No. 133793
Form # FT649

P12-GADA-USA

12 [305] Wide Domestic Grate

Dimensional data (Imperial and [Metric]) are subject to manufacturing tolerances and change without notice. Linear (in[mm]), area (in²[cm²], and weight (lbs[kg])

Back to Index

Please Check ✓	Item No.	Part Number	Item I.D.
	17	84257	P12-GADA-USA

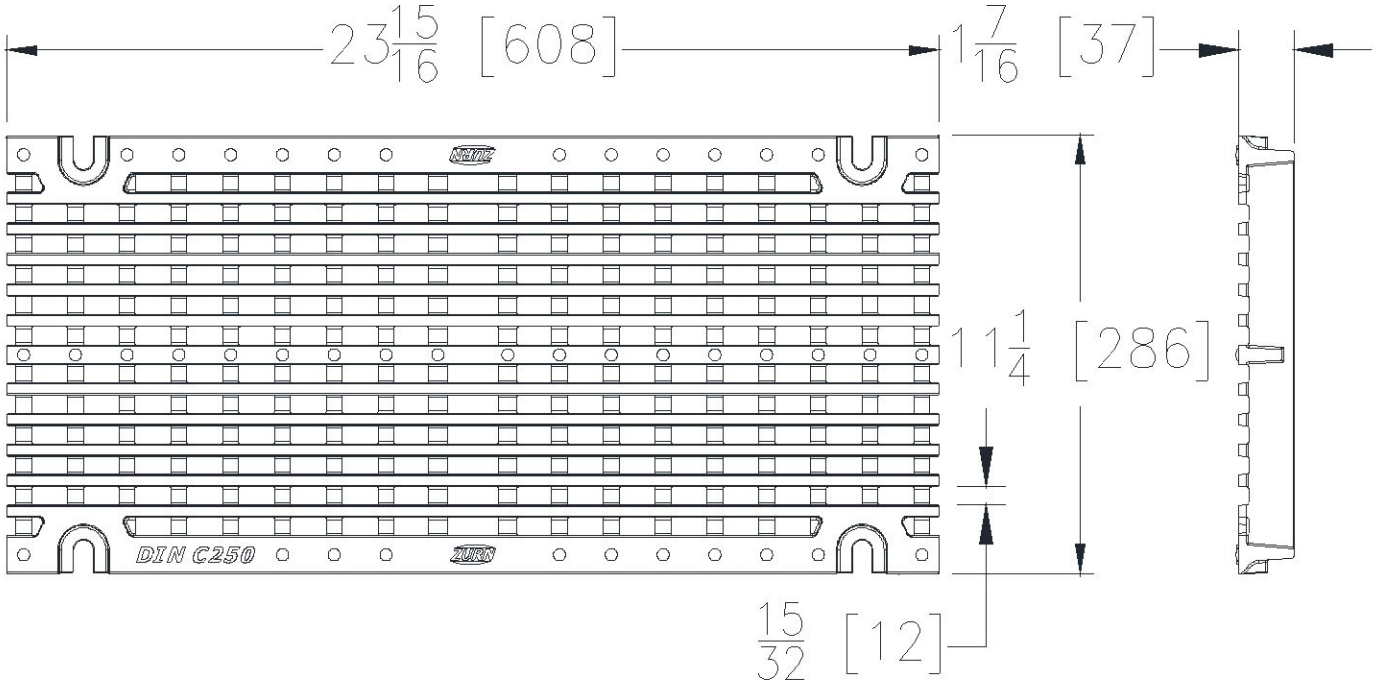

GADA-USA GRATE ENGINEERING SPECIFICATION: The Zurn P12-GADA-USA Galvanized Ductile Iron ADA Compliant Grate, is 11-1/4" [286mm] wide X 23-15/16" [608mm] long, weighing 15.6 lbs per linear foot [23 kg/m]. The grate has an open area of 65.2 in² per linear foot [1380 cm²/m], DIN Rating of C, ANSI Rating of Heavy-Duty, ADA compliant, and H-20 Load Rated. Ductile Iron conforms to ASTM A536 Grade 80-55-06. Galvanizing (hot dip) conforms to ASTM specification A123.

GADA-USA- ADA Compliant	
Material:	Galvanized Ductile Iron
DIN Rating:	Class C
Weight:	15.6 lbs/ft. [23 kg/m]
Open Area:	65.2 in²/ft. [1380 cm²/m]
ANSI Rating:	Heavy-Duty
Application:	ADA, Roadway
Slot Width/Hole Size: 15/32 [12]	
ADA:	Yes
H-20:	Yes
FAA:	No

Zurn Industries, LLC | **Light Commercial Plumbing Products**
1801 Pittsburgh Avenue, Erie, PA U.S.A. 16502 · Ph. 855-663-9876, Fax 814-454-7929
In Canada | **Zurn Industries Limited**
3544 Nashua Drive, Mississauga, Ontario L4V 1L2 · Ph. 905-405-8272, Fax 905-405-1292
www.zurn.com

Rev. AA
Date: 01/11/16
C.N. No. 133793
Form # FT649

P12-GDC

12 [305] Wide

Dimensional data (Imperial and [Metric]) are subject to manufacturing tolerances and change without notice. Linear (in[mm]), area (in²[cm²], and weight (lbs[kg])

Back to Index

Please Check ✓	Item No.	Part Number	Item I.D.
	18	84225	P12-GDC

Supercedes
63913

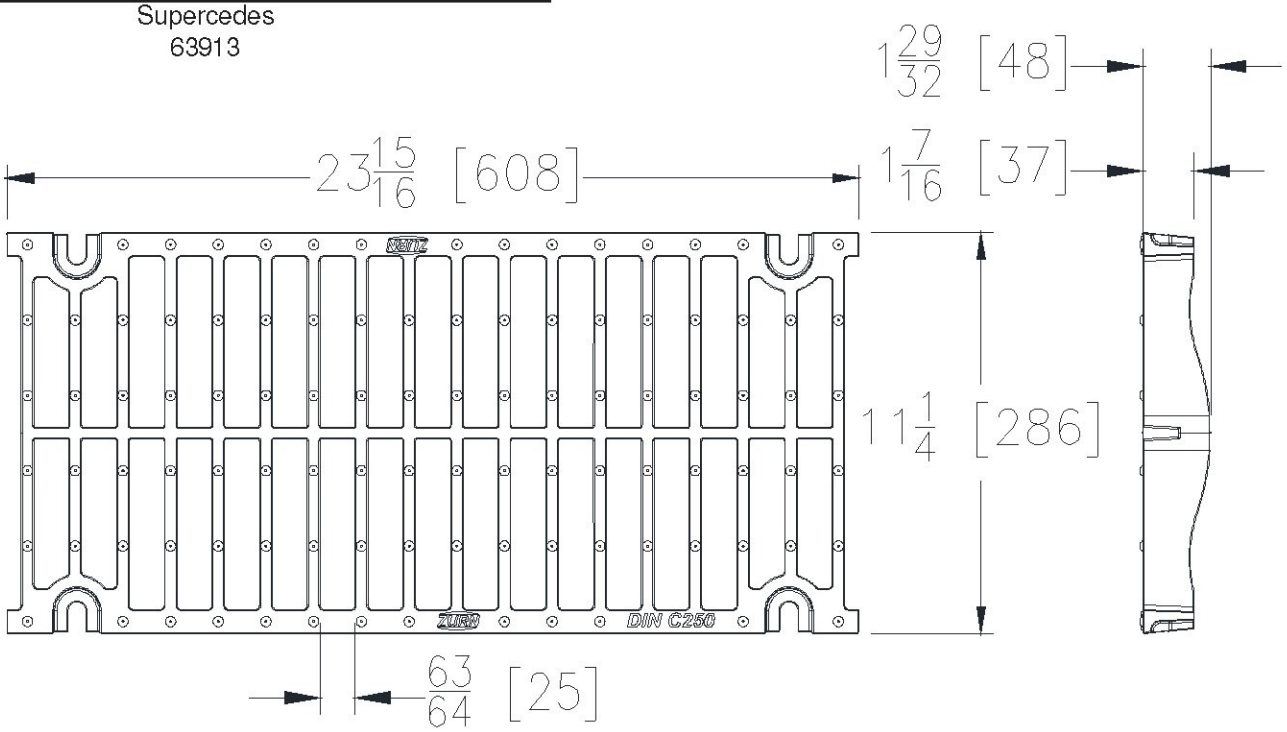

GDC GRATE ENGINEERING SPECIFICATION: The Zurn P12-GDC Galvanized Ductile Iron Slotted Grate, is 11-1/4" [286mm] wide X 23-15/16" [608mm] long, weighing 14.7 lbs per linear foot [22 kg/m]. The grate has an open area of 80.8 in² per linear foot [1710 cm²/m], DIN Rating of C, ANSI Rating of Heavy-Duty, and H-20 Load Rated. Ductile Iron conforms to ASTM A536 Grade 80-55-06. Galvanizing (hot dip) conforms to ASTM specification A123.

GDC - Galvanzied Ductile Iron	
Material:	Ductile Iron
DIN Rating:	Class C
Weight:	14.7 lbs/ft. [22 kg/m]
Open Area:	80.8 in²/ft. [1710 cm²/m]
ANSI Rating:	Heavy-Duty
Application:	Vehicle & Truck
Slot Width/Hole Size: 63/64 [25]	
ADA:	No
H-20:	Yes
FAA:	No

P12-GDC-USA

12 [305] Wide Domestic Grate

Dimensional data (Imperial and [Metric]) are subject to manufacturing tolerances and change without notice. Linear (in[mm]), area (in²[cm²], and weight (lbs[kg])

Back to Index

Please Check ✓	Item No.	Part Number	Item I.D.
	19	84225	P12-GDC-USA

Supercedes
63913

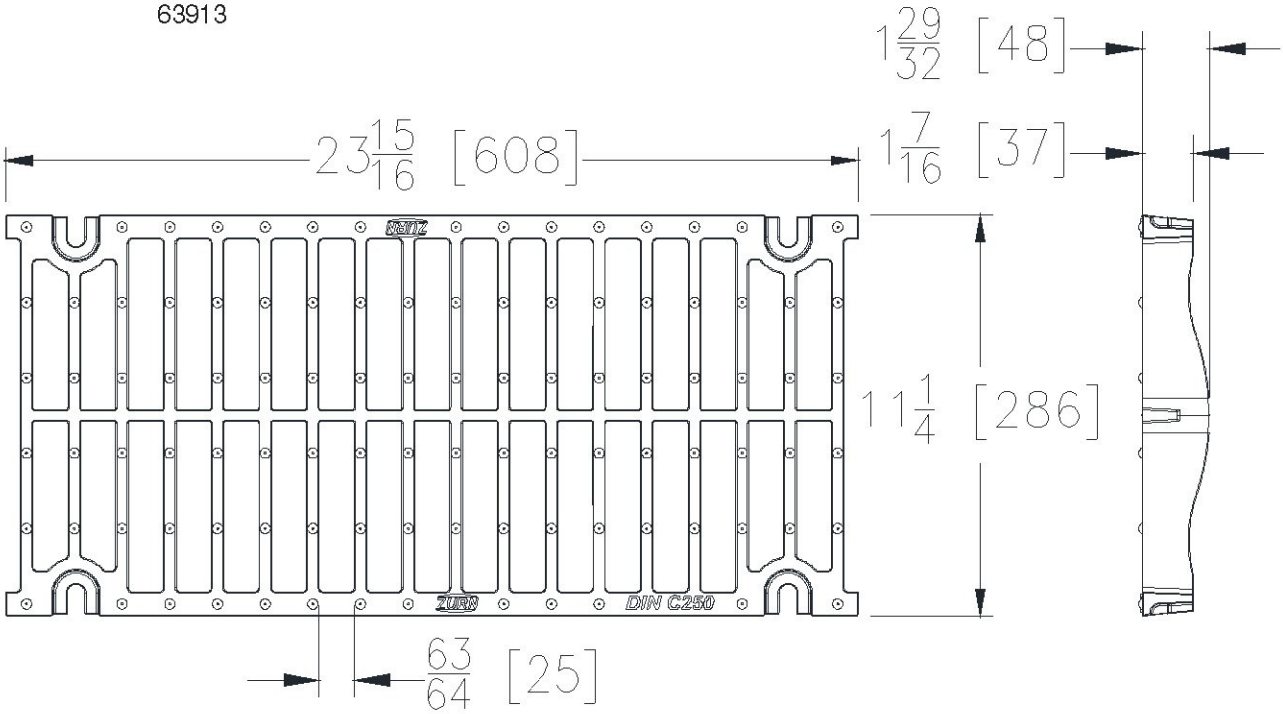

GDC-USA GRATE ENGINEERING SPECIFICATION: The Zurn P12-GDC-USA Galvanized Ductile Iron Slotted Grate, is 11-1/4" [286mm] wide X 23-15/16" [608mm] long, weighing 14.7 lbs per linear foot [22 kg/m]. The grate has an open area of 86.7 in² per linear foot [1835 cm²/m], DIN Rating of C, ANSI Rating of Heavy-Duty, and H-20 Load Rated. Ductile Iron conforms to ASTM A536 Grade 80-55-06. Galvanizing (hot dip) conforms to ASTM specification A123.

GDC-USA -Galvanzied Ductile Iron	
Material:	Ductile Iron
DIN Rating:	Class C
Weight:	14.7 lbs/ft. [22 kg/m]
Open Area:	86.7 in²/ft. [1835 cm²/m]
ANSI Rating:	Heavy-Duty
Application:	Vehicle & Truck
Slot Width/Hole Size: 63/64 [25]	
ADA:	No
H-20:	Yes
FAA:	No

P12-GDE

12 [305] Wide Grate

Dimensional data (Imperial and [Metric]) are subject to manufacturing tolerances and change without notice. Linear (in[mm]), area (in²[cm²], and weight (lbs[kg])

Back to Index

Please Check ✓	Item No.	Part Number	Item I.D.
	20	82038	P12-GDE

Supersedes 63958

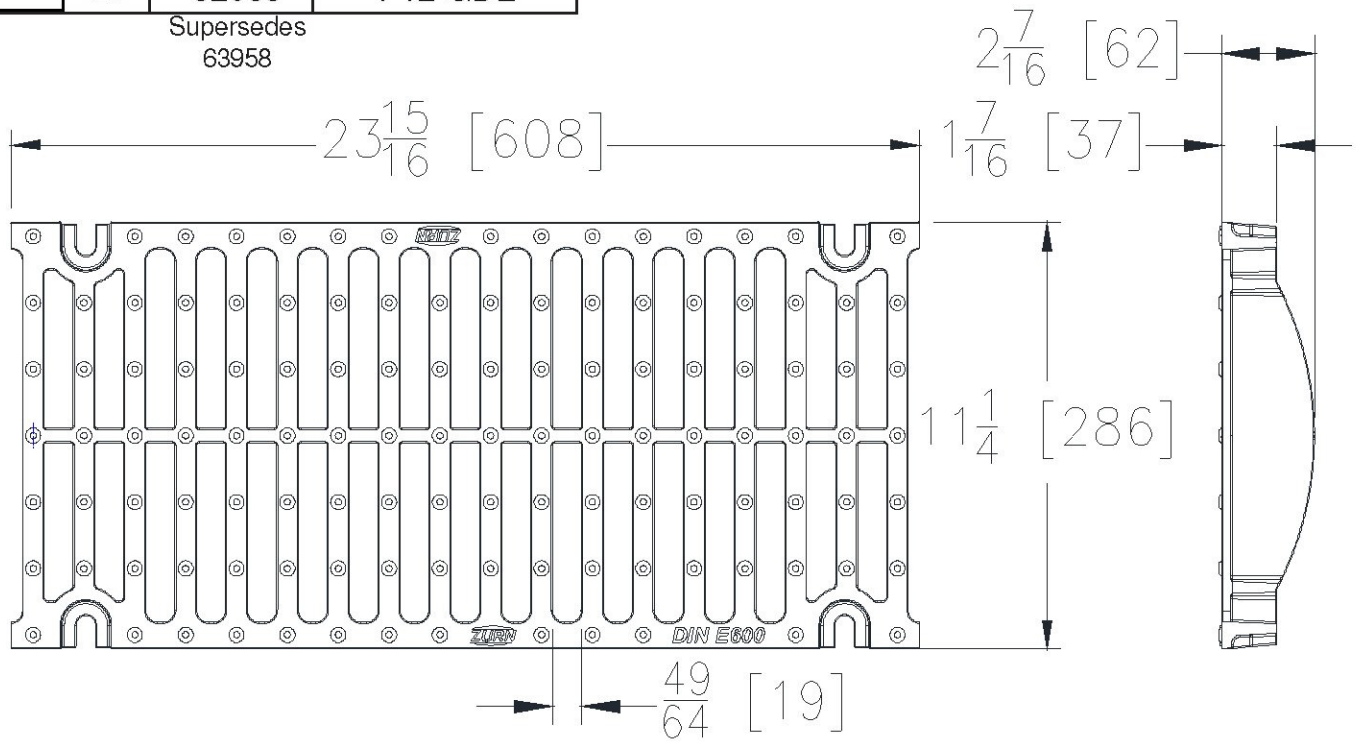

GDE GRATE ENGINEERING SPECIFICATION: The Zurn P12-GDE Galvanized Ductile Iron Slotted Grate, is 11-1/4" [286mm] wide X 23-15/16" [608mm] long, weighing 19.8 lbs per linear foot [29 kg/m]. The grate has an open area of 60.3 in² per linear foot [1276 cm²/m], DIN Rating of E, ANSI Rating of Special-Duty, H-20 Load Rated, and FAA Load Rated. Ductile Iron conforms to ASTM A536 Grade 80-55-06. Galvanizing (hot dip) conforms to ASTM specification A123.

GDE - Galvanized Ductile Iron	
Material:	Ductile Iron
DIN Rating:	Class E
Weight:	19.8 lbs/ft. [29 kg/m]
Open Area:	60.3 in²/ft. [1276 cm²/m]
ANSI Rating:	Special-Duty
Application:	Hard Wheel & Truck
Slot Width/Hole Size: 49/64 [19]	
ADA:	No
H-20:	Yes
FAA:	Yes

P12-GDE-USA

12 [305] Wide Domestic Grate

Dimensional data (Imperial and [Metric]) are subject to manufacturing tolerances and change without notice. Linear (in[mm]), area (in²[cm²], and weight (lbs[kg])

Back to Index

Please Check ✓	Item No.	Part Number	Item I.D.
	21	84220	P12-GDE-USA

Supercedes
63958

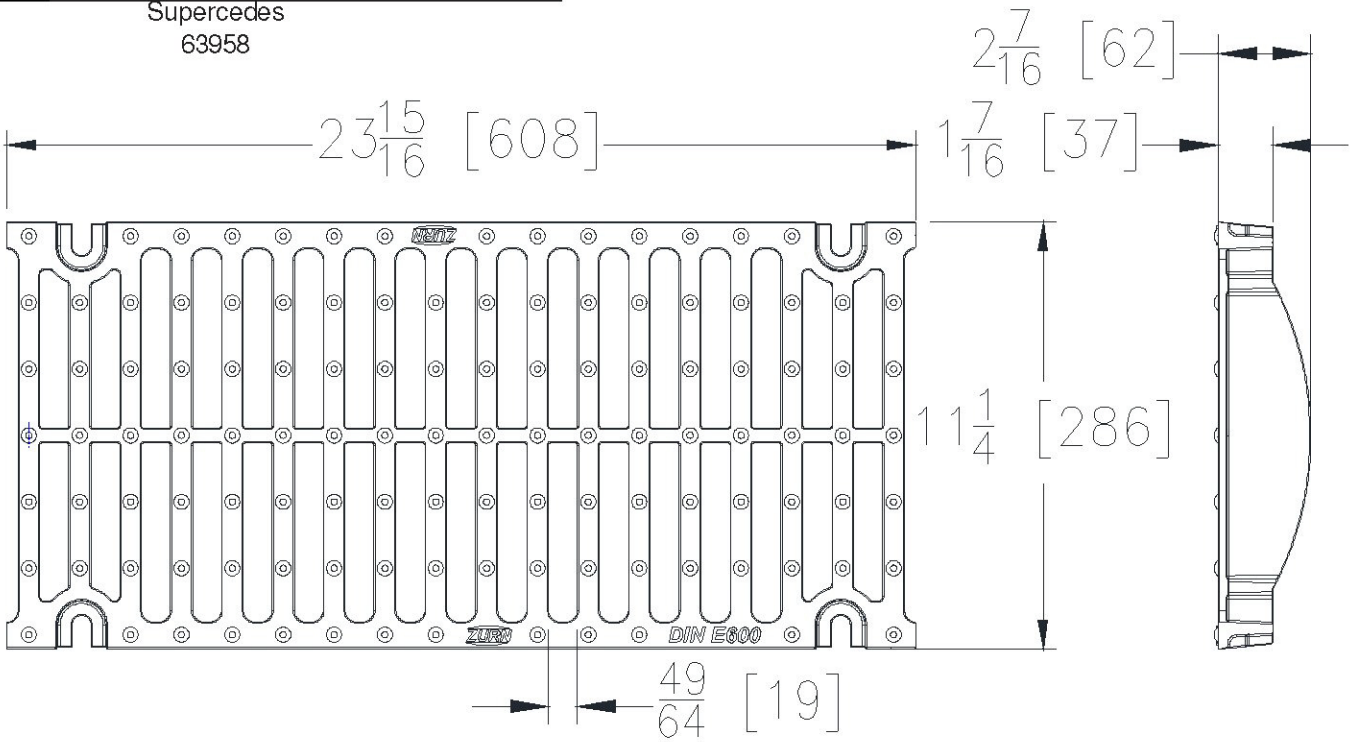

GDE-USA GRATE ENGINEERING SPECIFICATION: The Zurn P12-GDE-USA Galvanized Ductile Iron Slotted Grate, is 11-1/4" [286mm] wide X 23-15/16" [608mm] long, weighing 19.5 lbs per linear foot [29 kg/m]. The grate has an open area of 60.3 in² per linear foot [1276 cm²/m], DIN Rating of E, ANSI Rating of Special-Duty, H-20 Load Rated, and FAA Load Rated. Ductile Iron conforms to ASTM A536 Grade 80-55-06. Galvanizing (hot dip) conforms to ASTM specification A123.

MADE IN THE USA

GDE-USA-Galvanized Ductile Iron	
Material:	Ductile Iron
DIN Rating:	Class E
Weight:	19.5 lbs/ft. [29 kg/m]
Open Area:	60.3 in²/ft. [1276 cm²/m]
ANSI Rating:	Special-Duty
Application:	Hard Wheel & Truck
Slot Width/Hole Size: 49/64 [19]	
ADA:	No
H-20:	Yes
FAA:	Yes

P12-GDF

12 [305] Wide Grate

Dimensional data (Imperial and [Metric]) are subject to manufacturing tolerances and change without notice. Linear (in[mm]), area (in²[cm²], and weight (lbs[kg])

Back to Index

Please Check ✓	Item No.	Part Number	Item I.D.
	22	65868	P12-GDF

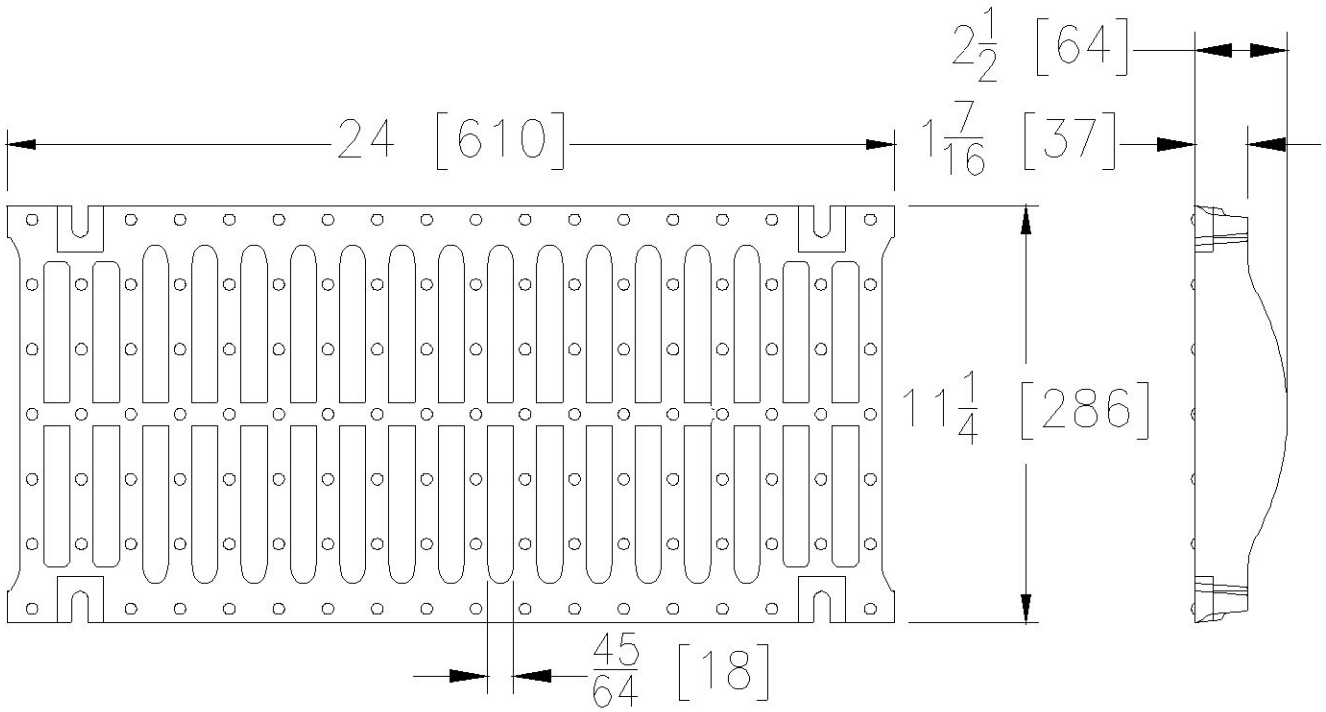

GDF GRATE ENGINEERING SPECIFICATION: The Zurn P12-GDF Galvanized Ductile Iron Slotted Grate, is 11-1/4" [286mm] wide X 24" [610mm] long, weighing 26 lbs per linear foot [39 kg/m]. The grate has an open area of 54 in² per linear foot [1143 cm²/m], DIN Rating of F, ANSI Rating of Special-Duty, H-20 Load Rated, and FAA Load Rated. Ductile Iron conforms to ASTM A536 Grade 80-55-06. Galvanizing (hot dip) conforms to ASTM specification A123.

GDF - Galvanized Ductile Iron	
Material:	Ductile Iron
DIN Rating:	Class F
Weight:	26 lbs/ft. [39 kg/m]
Open Area:	54 in²/ft [1143 cm²/m]
ANSI Rating:	Special-Duty
Application:	Dynamic loads
Slot Width/Hole Size: 45/64 [18]	
ADA:	No
H-20:	Yes
FAA:	Yes

P12-GG

12 [305] Wide Grate

Dimensional data (Imperial and [Metric]) are subject to manufacturing tolerances and change without notice. Linear (in[mm]), area (in²[cm²], and weight (lbs[kg])

Back to Index

Please Check ✓	Item No.	Part Number	Item I.D.
	23	58553	P12-GG

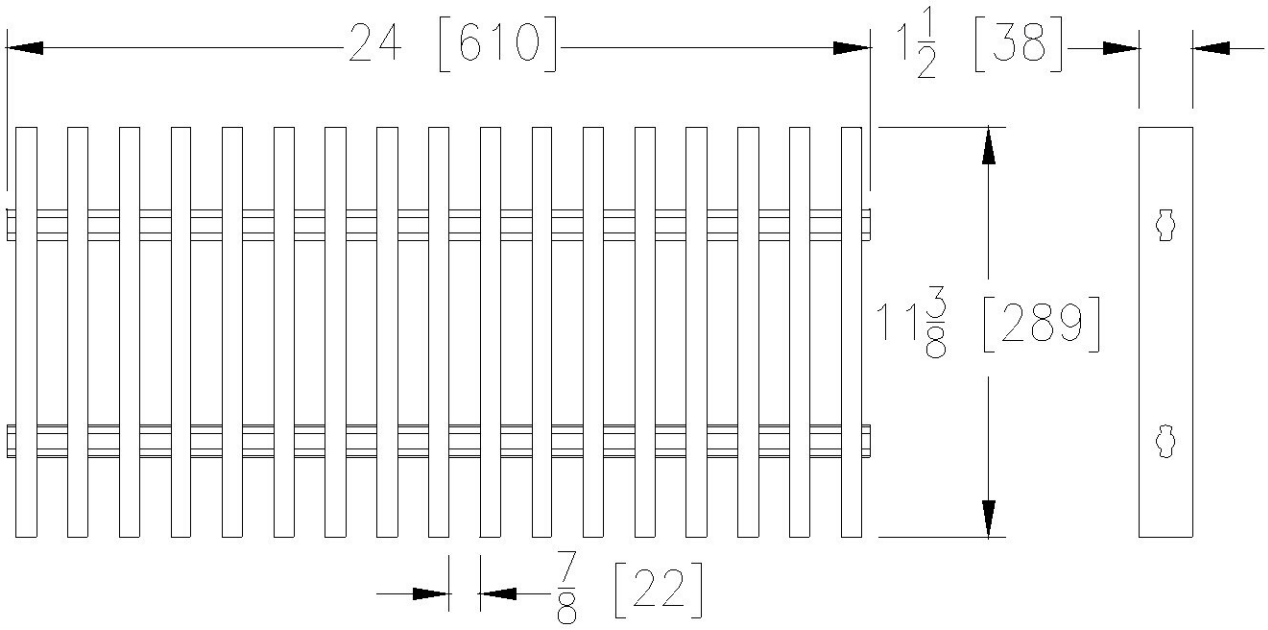

GG GRATE ENGINEERING SPECIFICATION: The Zurn P12-GG Vinylester Fiberglass Slotted Grate, is 11-3/8" [289mm] wide X 24" [610mm] long, weighing 2.8 lbs per linear foot [4 kg/m]. The grate has an open area of 82.5 in² per linear foot [1746 cm²/m], DIN Rating of A, ANSI Rating of Light-Duty and a slip resistant surface. Conforms to interplastic CORVE8300, or REICHHOLD DION 9100, or equivalent.

GG- Vinylester Fiberglass Slotted Grate	
Material:	Vinylester Fiberglass
DIN Rating:	Class A
Weight:	2.8 lbs/ft. [4 kg/m]
Open Area:	82.5 in²/ft. [1746 cm²/m]
ANSI Rating:	Light-Duty
Application:	Chemical Resistance
Slot Width/Hole Size: 7/8 [22]	
ADA:	No
H-20:	No
FAA:	No

P12-GHPD

12 [305] Wide Grate

Dimensional data (Imperial and [Metric]) are subject to manufacturing tolerances and change without notice. Linear (in[mm]), area (in²[cm²], and weight (lbs[kg])

Back to Index

Please Check ✓	Item No.	Part Number	Item I.D.
	24	61015	P12-GHPD

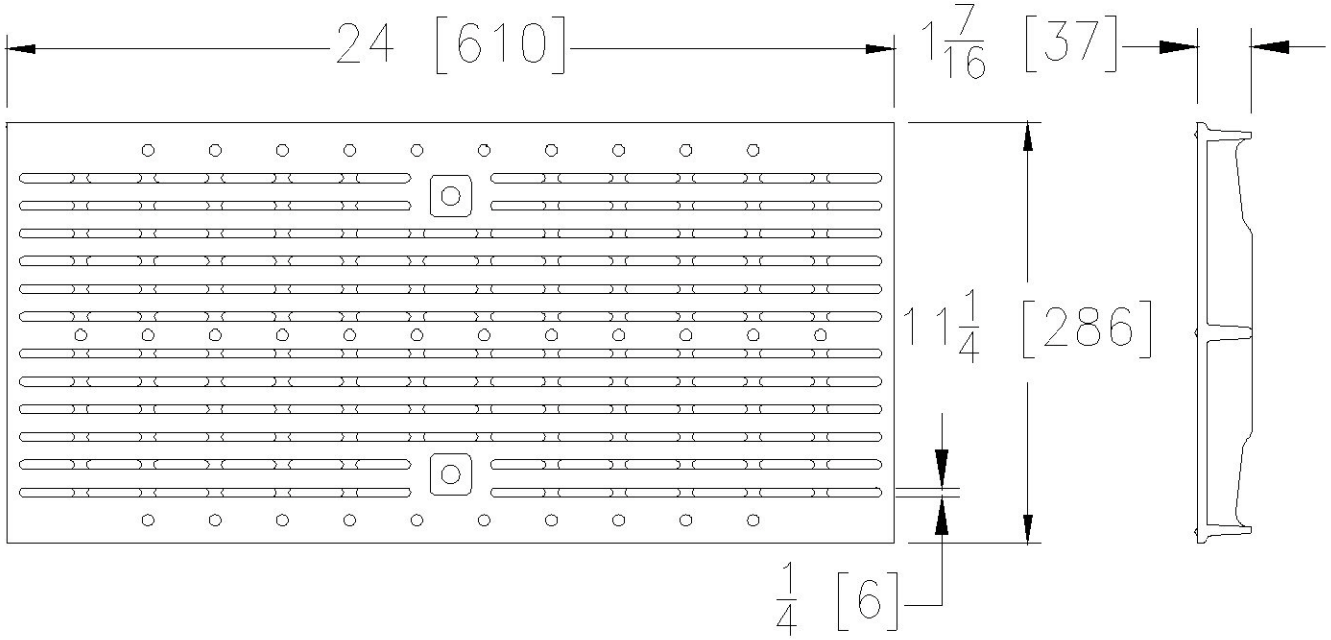

GHPD GRATE ENGINEERING SPECIFICATION: The Zurn P12-GHPD Galvanized Ductile Iron Heel-Proof Longitudinal Grate, is 11-1/4" [286mm] wide X 24" [610mm] long, weighing 14 lbs per linear foot [21 kg/m]. The grate has an open area of 33.7 in² per linear foot [713 cm²/m], DIN Rating of B, ANSI Rating of Medium-Duty, and ADA compliant. Ductile Iron conforms to ASTM A536 Grade 80-55-06. Galvanizing (hot dip) conforms to ASTM specification A123.

GHPD - Galvanized Heel-Proof	
Material:	Ductile Iron
DIN Rating:	Class B
Weight:	14 lbs/ft. [21 kg/m]
Open Area:	33.7 in²/ft. [713 cm²/m]
ANSI Rating:	Medium-Duty
Application: Heel-Proof, Pedestrian	
Slot Width/Hole Size: 1/4 [6]	
ADA:	Yes
H-20:	No
FAA:	No

P12-GHPDE

12 [305] Wide Grate

Dimensional data (Imperial and [Metric]) are subject to manufacturing tolerances and change without notice. Linear (in[mm]), area (in²[cm²], and weight (lbs[kg])

Back to Index

Please Check ✓	Item No.	Part Number	Item I.D.
	25	94325	P12-GHPDE

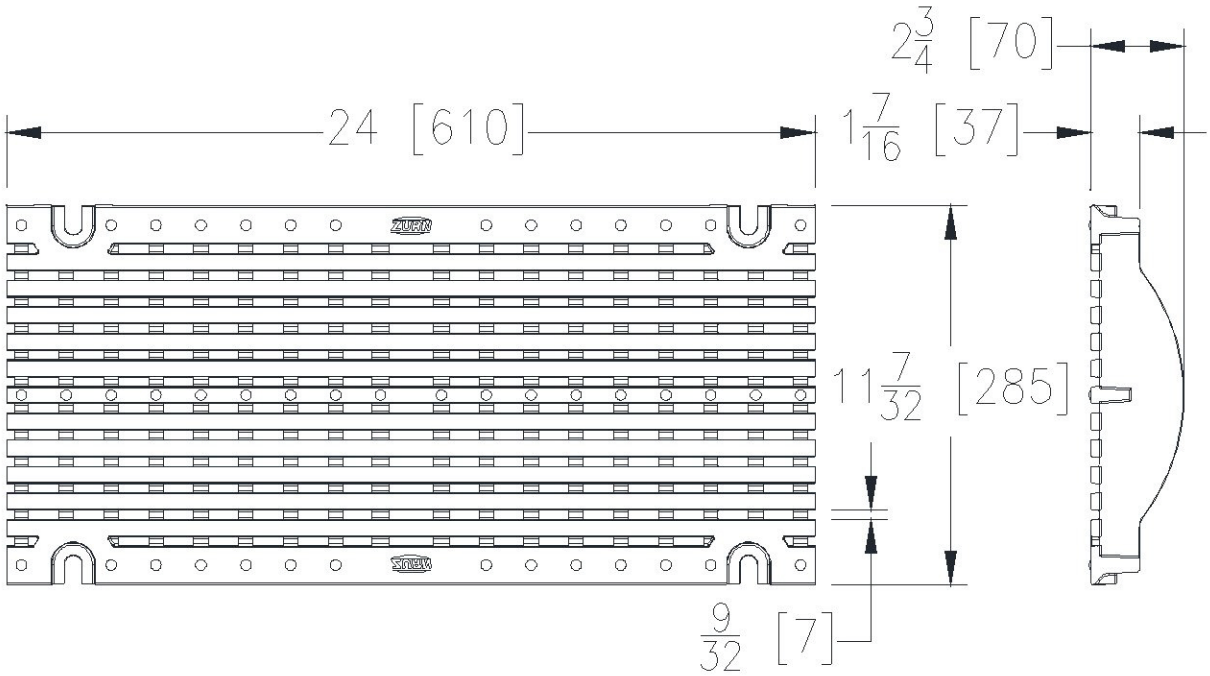

GHPDE GRATE ENGINEERING SPECIFICATION: The Zurn P12-GHPDE Galvanized Ductile Iron Heel-Proof Longitudinal Grate, is 11-7/32" [285mm] wide X 24" [610mm] long, weighing 29.6 lbs per linear foot [44 kg/m]. The grate has an open area of 29.9 in² per linear foot [633 cm²/m], DIN Rating of E, ANSI Rating of Special-Duty, ADA compliant, H-20 Load Rated, and FAA Load Rated. Ductile Iron conforms to ASTM A536 Grade 80-55-06. Galvanizing (hot dip) conforms to ASTM specification A123.

GHPDE - Galvanized Heel-Proof	
Material:	Ductile Iron
DIN Rating:	Class E
Weight:	29.6 lbs/ft. [44 kg/m]
Open Area:	29.9 in²/ft. [633 cm²/m]
ANSI Rating:	Special-Duty
Application: Heel-Proof, Forklifts, Commercial Aircraft	
Slot Width/Hole Size: 9/32 [7]	
ADA:	Yes
H-20:	Yes
FAA:	Yes

P12-GHPDE-USA

12 [305] Wide Grate

Dimensional data (Imperial and [Metric]) are subject to manufacturing tolerances and change without notice. Linear (in[mm]), area (in²[cm²], and weight (lbs[kg])

Back to Index

Please Check ✓	Item No.	Part Number	Item I.D.
	26	94325	P12-GHPDE-USA

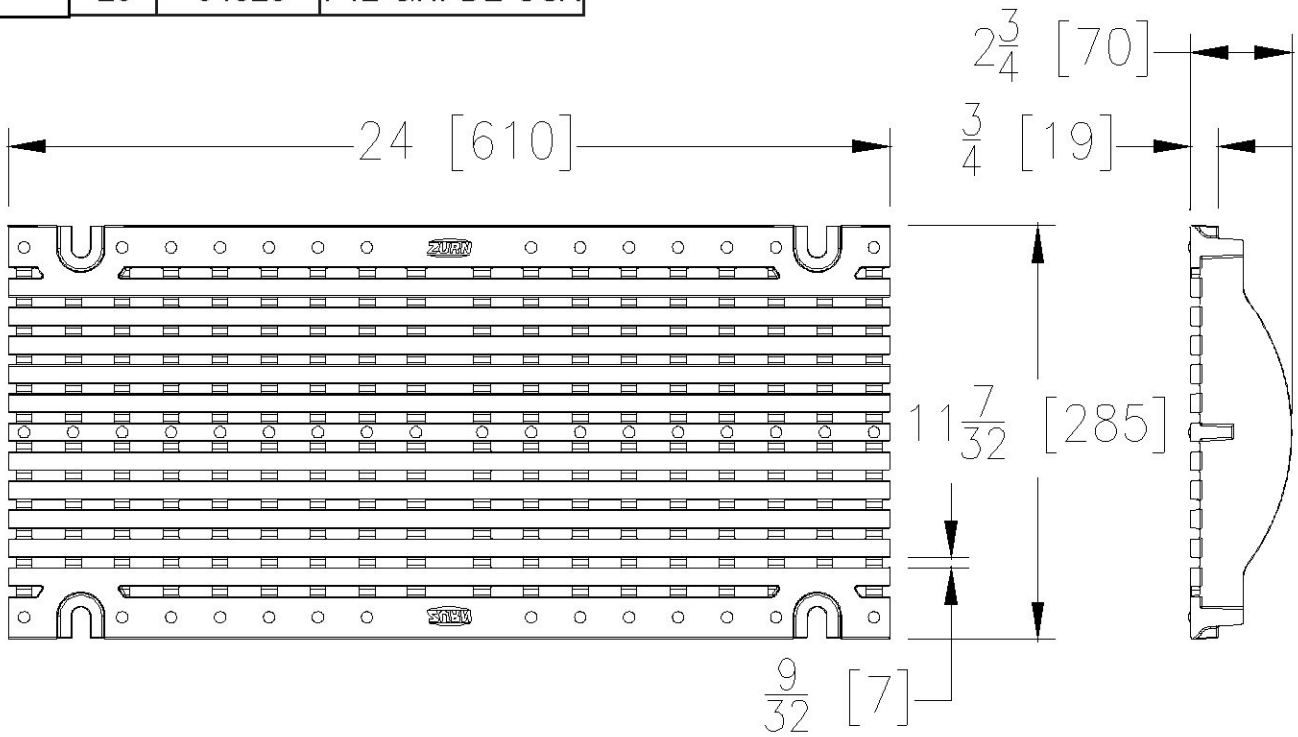

GHPDE-USA GRATE ENGINEERING SPECIFICATION: The Zurn P12-GHPDE-USA Galvanized Ductile Iron Heel-Proof Longitudinal Grate, is 11-7/32" [285mm] wide X 24" [610mm] long, weighing 29.6 lbs per linear foot 44 kg/m]. The grate has an open area of 29.9 in² per linear foot [633 cm²/m], DIN Rating of E, ANSI Rating of Special-Duty, ADA compliant, H-20 Load Rated, and FAA Load Rated. Ductile Iron conforms to ASTM A536 Grade 80-55-06. Galvanizing (hot dip) conforms to ASTM specification A123.

GHPDE-USA - Galvanized Heel-Proof	
Material:	Ductile Iron
DIN Rating:	Class E
Weight:	29.6 lbs/ft. [44 kg/m]
Open Area:	29.9 in²/ft. [633 cm²/m]
ANSI Rating:	Special-Duty
Application: Heel-Proof, Forklifts, Commercial Aircraft	
Slot Width/Hole Size: 9/32 [7]	
ADA:	Yes
H-20:	Yes
FAA:	Yes

P12-HPD

12 [305] Wide Grate

Dimensional data (Imperial and [Metric]) are subject to manufacturing tolerances and change without notice. Linear (in[mm]), area (in²[cm²], and weight (lbs[kg])

Back to Index

Please Check ✓	Item No.	Part Number	Item I.D.
	27	61015	P12-HPD

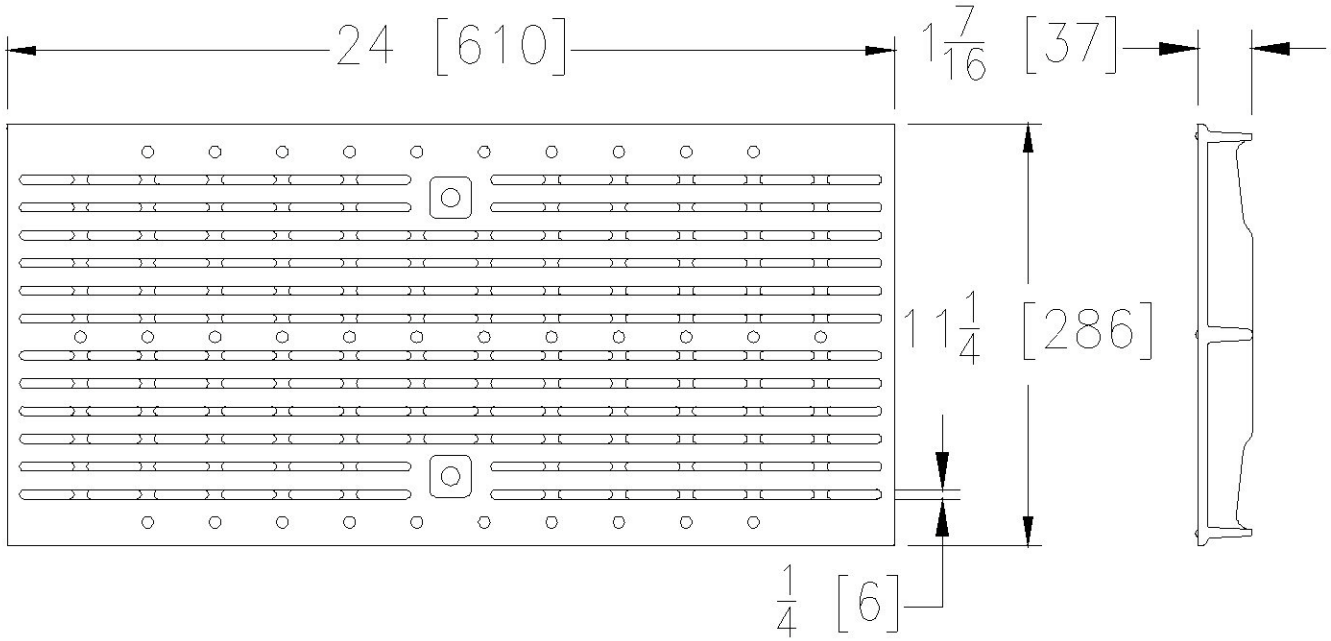

HPD GRATE ENGINEERING SPECIFICATION: The Zurn P12-HPD Ductile Iron Heel-Proof Longitudinal Grate, is 11-1/4" [286mm] wide X 24" [610mm] long, weighing 14 lbs [21 kg/m] per linear foot. The grate has an open area of 33.7 in² per linear foot [713 cm²/m], DIN Rating of B, ANSI Rating of Medium-Duty, and ADA compliant. Ductile Iron conforms to ASTM A536 Grade 80-55-06.

HPD - Heel-Proof	
Material:	Ductile Iron
DIN Rating:	Class B
Weight:	14 lbs/ft. [21 kg/m]
Open Area:	33.7 in²/ft. [713 cm²/m]
ANSI Rating:	Medium-Duty
Application: Heel-Proof, Pedestrian	
Slot Width/Hole Size: 1/4 [6]	
ADA:	Yes
H-20:	No
FAA:	No

P12-HPDE

12 [305] Wide Grate

Dimensional data (Imperial and [Metric]) are subject to manufacturing tolerances and change without notice. Linear (in[mm]), area (in²[cm²], and weight (lbs[kg])

Back to Index

Please Check ✓	Item No.	Part Number	Item I.D.
	28	94325	P12-HPDE

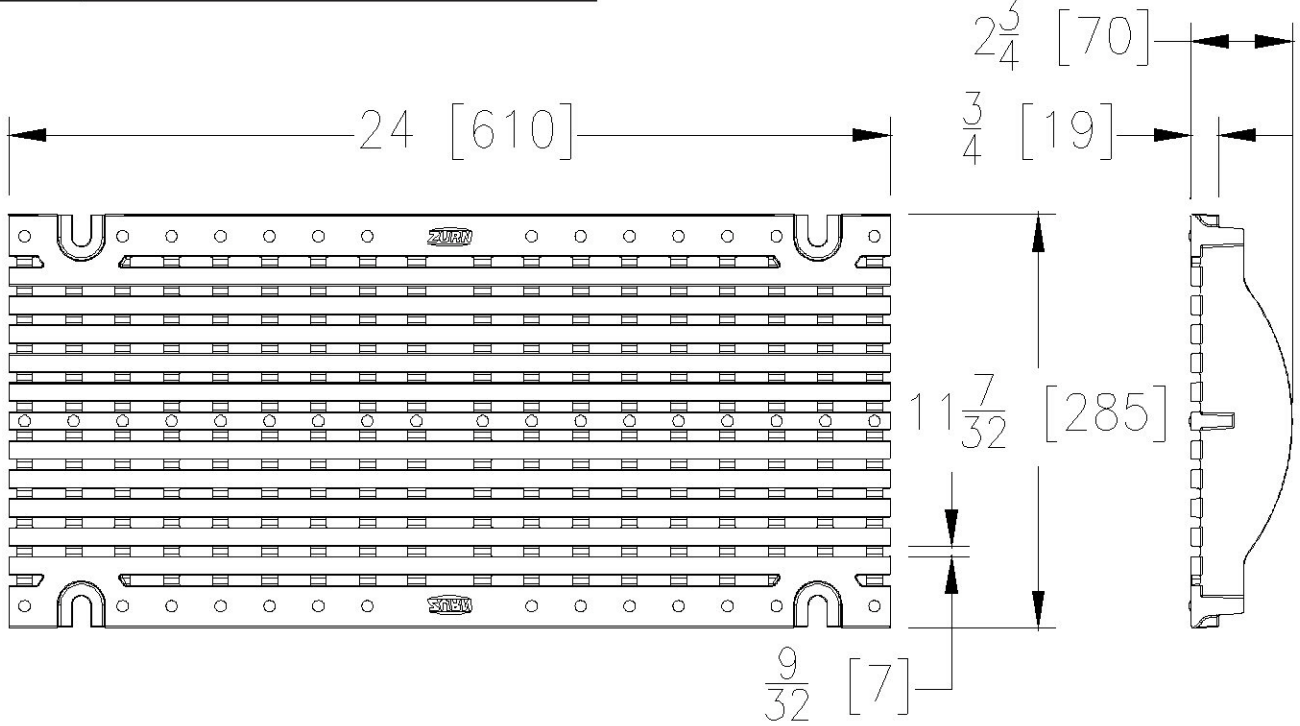

HPDE GRATE ENGINEERING SPECIFICATION: The Zurn P12-HPDE Ductile Iron Heel-Proof Longitudinal Grate, is 11-7/32" [285mm] wide X 24" [610mm] long, weighing 29.6 lbs per linear foot [44 kg/m]. The grate has an open area of 29.9 in² per linear foot [633 cm²/m], DIN Rating of E, ANSI Rating of Special-Duty, ADA compliant, H-20 Load Rated, and FAA Load Rated. Ductile Iron conforms to ASTM A536 Grade 80-55-06.

HPDE - Heel-Proof	
Material:	Ductile Iron
DIN Rating:	Class E
Weight:	29.6 lbs/ft. [44 kg/m]
Open Area:	29.9 in²/ft. [633 cm²/m]
ANSI Rating:	Special-Duty
Application: Heel-Proof, Forklifts, Commercial Aircraft	
Slot Width/Hole Size: 9/32 [7]	
ADA:	Yes
H-20:	Yes
FAA:	Yes

Zurn Industries, LLC | **Light Commercial Plumbing Products**
1801 Pittsburgh Avenue, Erie, PA U.S.A. 16502 · Ph. 855-663-9876, Fax 814-454-7929
In Canada | **Zurn Industries Limited**
3544 Nashua Drive, Mississauga, Ontario L4V 1L2 · Ph. 905-405-8272, Fax 905-405-1292
www.zurn.com

Rev. AA
Date: 01/11/16
C.N. No. 133793
Form # FT649

P12-HPDE-USA

12 [305] Wide Grate

Dimensional data (Imperial and [Metric]) are subject to manufacturing tolerances and change without notice. Linear (in[mm]), area (in²[cm²], and weight (lbs[kg])

Back to Index

Please Check ✓	Item No.	Part Number	Item I.D.
	29	94325	P12-HPDE-USA

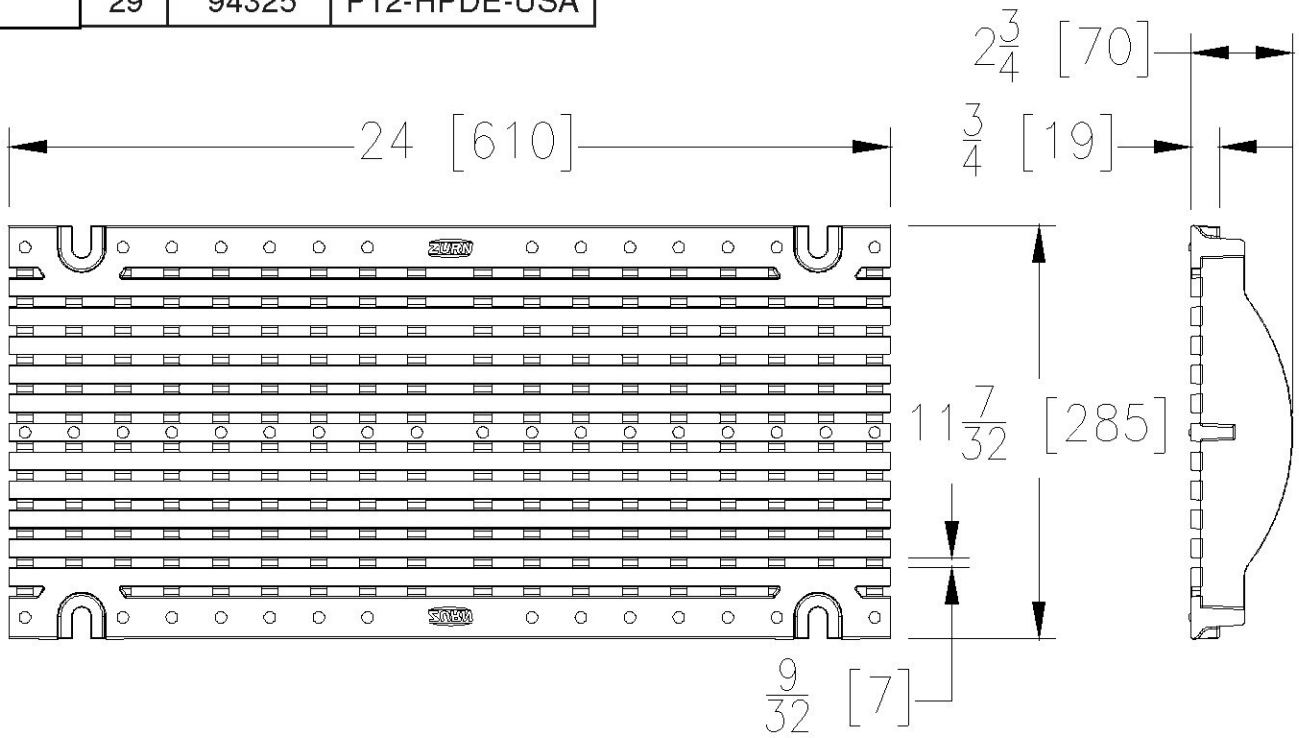

HPDE-USA GRATE ENGINEERING SPECIFICATION: The Zurn P12-HPDE-USA Ductile Iron Heel-Proof Longitudinal Grate, is 11-7/32" [285mm] wide X 24" [610mm] long, weighing 29.6 lbs per linear foot [44 kg/m]. The grate has an open area of 29.9 in² per linear foot [633 cm²/m], DIN Rating of E, ANSI Rating of Special-Duty, ADA compliant, H-20 Load Rated, and FAA Load Rated. Ductile Iron conforms to ASTM A536 Grade 80-55-06.

HPDE-USA - Heel-Proof	
Material:	Ductile Iron
DIN Rating:	Class E
Weight:	29.6 lbs/ft. [44 kg/m]
Open Area:	29.9 in²/ft. [633 cm²/m]
ANSI Rating:	Special-Duty
Application: Heel-Proof, Forklifts, Commercial Aircraft	
Slot Width/Hole Size: 9/32 [7]	
ADA:	Yes
H-20:	Yes
FAA:	Yes

P12-PG

12 [305] Wide Domestic Grate

Dimensional data (Imperial and [Metric]) are subject to manufacturing tolerances and change without notice. Linear (in[mm]), area (in²[cm²], and weight (lbs[kg])

Back to Index

Please Check ✓	Item No.	Part Number	Item I.D.
	30	60745	P12-PG

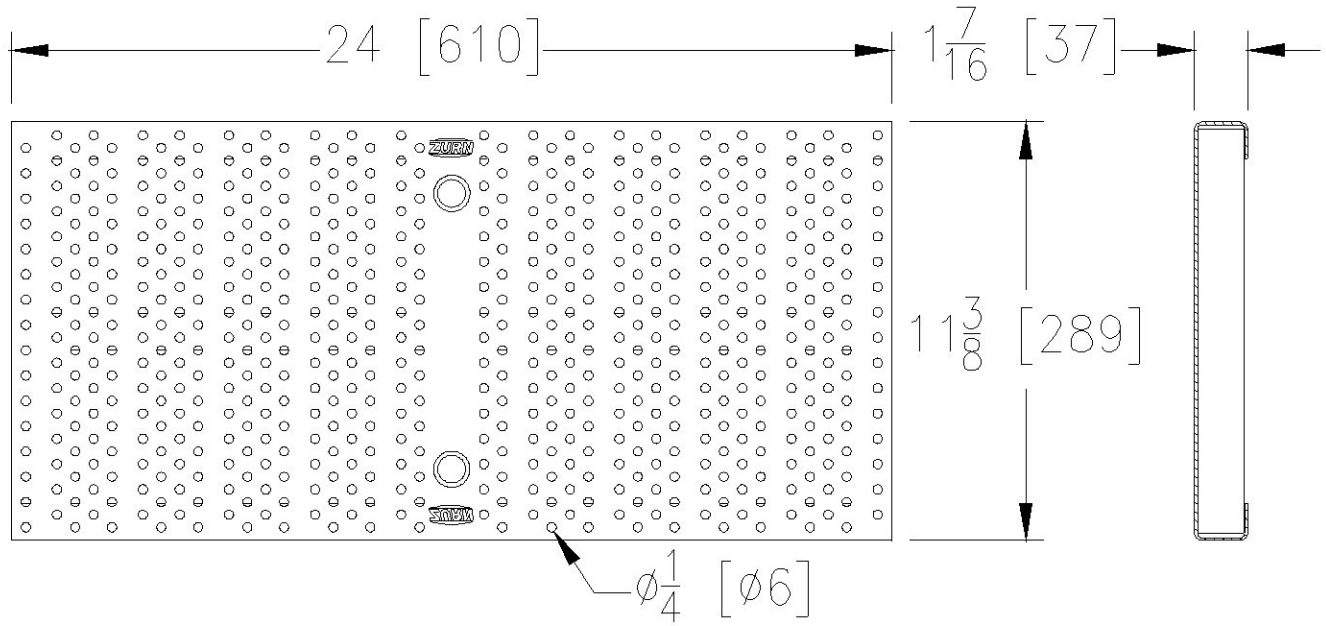

PG GRATE ENGINEERING SPECIFICATION: The Zurn P12-PG Galvanized Perforated Steel, is 11-3/8" [289mm] wide X 24" [610mm] long, weighing 7 lbs per linear foot [10 kg/m]. The grate has an open area of 14.9 in² per linear foot [315 cm²/m], DIN Rating of A, ANSI Rating of Light-Duty, and ADA Compliant. Carbon Steel conforms to ASTM A36. Galvanized Sheet conforms to ASTM Specification A653, Galvanized Coating designation G60, minimum spangle.

MADE IN THE USA

PG - Perforated Galvanized	
Material:	Galvanized Steel
DIN Rating:	Class A
Weight:	7 lbs/ft. [10 kg/m]
Open Area:	14.9 in²/ft. [315 cm²/m]
ANSI Rating:	Light-Duty
Application: Heel-Proof & Pedestrian	
Slot Width/Hole Size: 1/4 [6]	
ADA:	Yes
H-20:	No
FAA:	No

P12-PGR

12 [305] Wide Galvanized Steel Raised Perforated
Anti-Slip ADA Grate

Dimensional data (Imperial and [Metric]) are subject to manufacturing tolerances and change without notice. Linear (in[mm]), area (in²[cm²], and weight (lbs[kg])

Back to Index

Please Check ✓	Item No.	Part Number	Item I.D.
	31	300572	P12-PGR

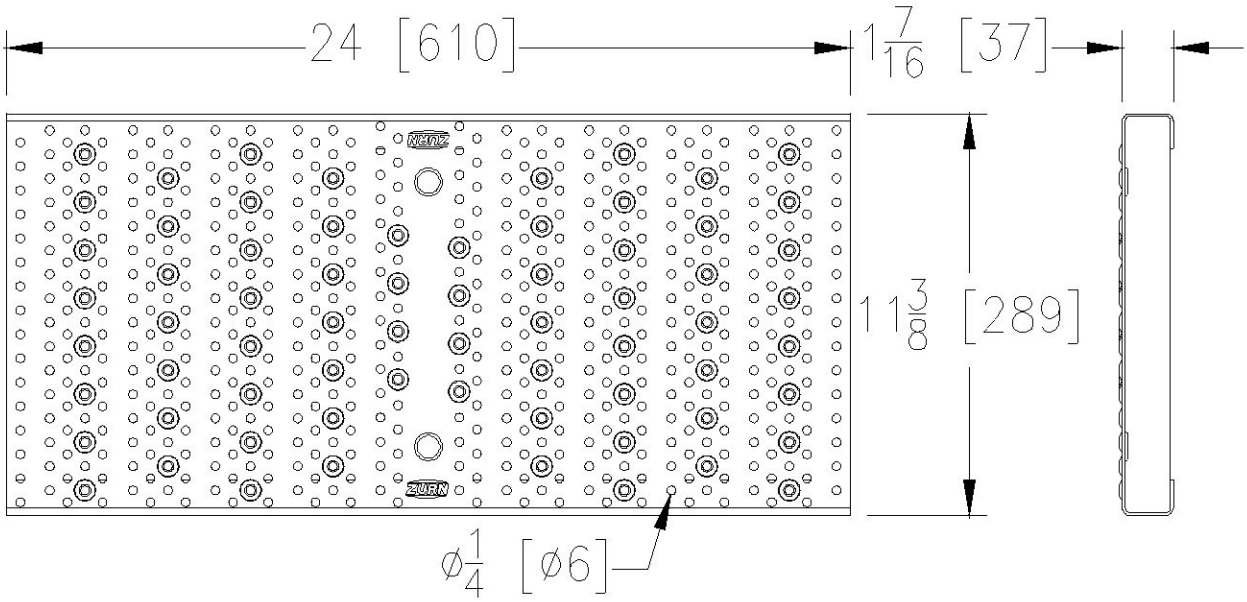

PGR GRATE ENGINEERING SPECIFICATION: The Zurn P12-PGR Galvanized Steel Raised Perforated Grate, is 11-3/8" [289mm] wide X 24" [610mm] long, weighing 7 lbs per linear foot [10kg/m]. The grate has an open area of 14.9 in² per linear foot [315 cm²/m], DIN Rating of A, ANSI Rating of Light-Duty, and ADA Compliant. Galvanized steel conforms to ASTM A36. Galvanized Sheet conforms to ASTM Specification A653, Galvanized Coating designation G60, minimum spangle.

PGR - Raised Perforated	
Material:	Galvanized Steel
DIN Rating:	Class A
Weight:	7.0 lbs/ft. [10 kg/m]
Open Area:	14.9 in²/ft. [315 cm²/m]
ANSI Rating:	Light-Duty
Application:	Heel-Proof & Pedestrian
Slot Width/Hole Size:	1/4 [6]
ADA:	Yes
H-20:	No
FAA:	No

P12-PS

12 [305] Wide Domestic Grate

Dimensional data (Imperial and [Metric]) are subject to manufacturing tolerances and change without notice. Linear (in[mm]), area (in²[cm²], and weight (lbs[kg])

Back to Index

Please Check ✓	Item No.	Part Number	Item I.D.
	32	60745	P12-PS

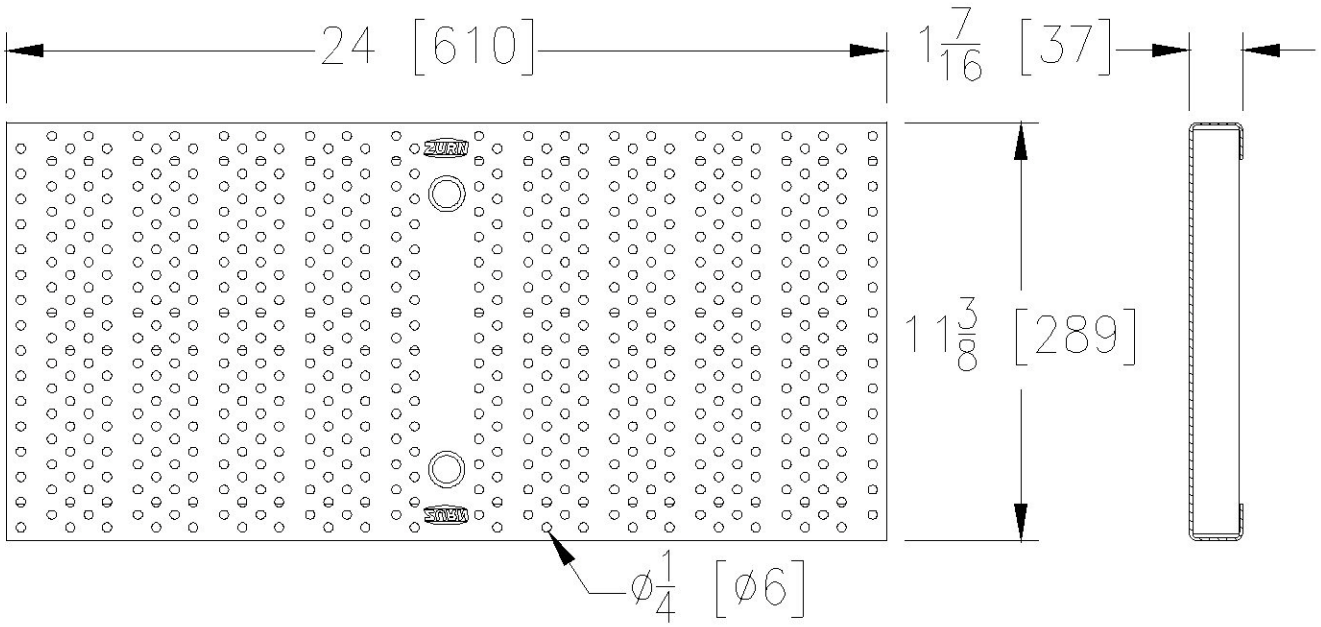

PS GRATE ENGINEERING SPECIFICATION: The Zurn P12-PS Perforated Stainless Steel, is 11-3/8" [289mm] wide X 24" [610mm] long, weighing 7.3 lbs per linear foot [11 kg/m]. The grate has an open area of 14.9 in² per linear foot [315 cm²/m], DIN Rating of A, ANSI Rating of Light-Duty, and ADA Compliant. Stainless Steel conforms to ASTM A240 Grade CF8 Type 304 (Type 316 by request).

MADE IN THE USA

PS - Perforated	
Material:	Type 304 Stainless Steel
DIN Rating:	Class A
Weight:	7.3 lbs/ft. [11 kg/m]
Open Area:	14.9 in²/ft. [315 cm²/m]
ANSI Rating:	Light-Duty
Application:	Heel-Proof & Pedestrian
Slot Width/Hole Size:	1/4 [6]
ADA:	Yes
H-20:	No
FAA:	No

P12-PSR

12 [305] Wide Stainless Steel Raised Perforated
Anti-Slip ADA Grate

Dimensional data (Imperial and [Metric]) are subject to manufacturing tolerances and change without notice. Linear (in[mm]), area (in²[cm²], and weight (lbs[kg])

Back to Index

Please Check ✓	Item No.	Part Number	Item I.D.
	33	300572	P12-PSR

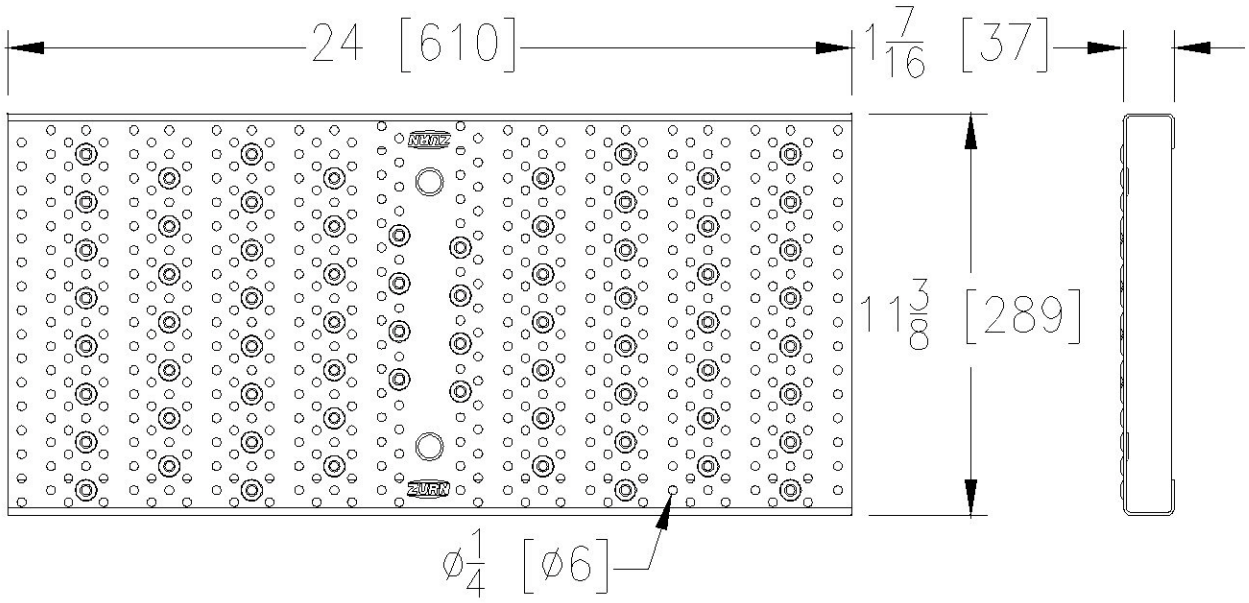

PSR GRATE ENGINEERING SPECIFICATION: The Zurn P12-PSR Stainless Steel Raised Perforated Grate, is 11-3/8" [289mm] wide X 24" [610mm] long, weighing 7.3 lbs per linear foot [11 kg/m]. The grate has an open area of 14.9 in² per linear foot [315 cm²/m], DIN Rating of A, ANSI Rating of Light-Duty, and ADA Compliant. Stainless Steel conforms to ASTM A240 Grade CF8 Type 304 (316 by request).

PSR - Raised Perforated	
Material:	Stainless Steel
DIN Rating:	Class A
Weight:	7.3 lbs/ft. [11 kg/m]
Open Area:	14.9 in²/ft. [315 cm²/m]
ANSI Rating:	Light-Duty
Application:	Heel-Proof & Pedestrian
Slot Width/Hole Size:	1/4 [6]
ADA:	Yes
H-20:	No
FAA:	No

MADE IN THE USA

Zurn Industries, LLC | **Light Commercial Plumbing Products**
1801 Pittsburgh Avenue, Erie, PA U.S.A. 16502 · Ph. 855-663-9876, Fax 814-454-7929
In Canada | **Zurn Industries Limited**
3544 Nashua Drive, Mississauga, Ontario L4V 1L2 · Ph. 905-405-8272, Fax 905-405-1292
www.zurn.com

Rev. AA
Date: 01/11/16
C.N. No. 133793
Form # FT649

P12-RFG

12 [305] Wide Domestic Grate

Dimensional data (Imperial and [Metric]) are subject to manufacturing tolerances and change without notice. Linear (in[mm]), area (in²[cm²], and weight (lbs[kg])

Back to Index

Please Check ✓	Item No.	Part Number	Item I.D.
	34	61019	P12-RFG

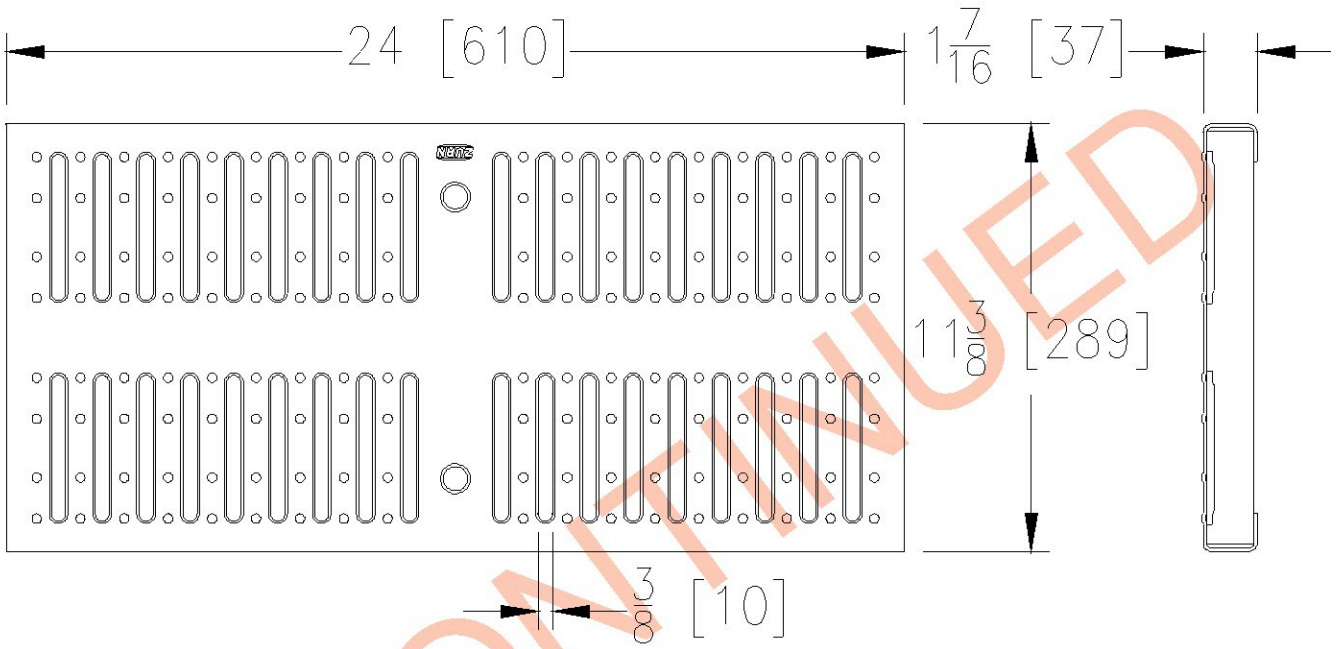

RFG GRATE ENGINEERING SPECIFICATION: The Zurn P12-RFG Reinforced Galvanized Steel, is 11-3/8" [289mm] wide X 24" [610mm] long, weighing 10.6 lbs per linear foot [16 kg/m]. The grate has an open area of 25.6 in² per linear foot [542 cm²/m], DIN Rating of B, and ANSI Rating of Medium-Duty. Galvanized Steel conforms to ASTM A36. Galvanized Skin conforms to ASTM Specification A653, Galvanized Coating designation G60, minimum spangle. For ADA compliance elongated opening must be pllaced perpindicular to the dominant direction of travel per ADA guidelines section.

RFG - Reinforced Galvanzied	
Material:	Galvanzied Steel
DIN Rating:	Class B
Weight:	10.6 lbs/ft. [16 kg/m]
Open Area:	25.6 in²/ft. [542 cm²/m]
ANSI Rating:	Medium-Duty
Application:	Light Vehicle
Slot Width/Hole Size: 3/8 [10]	
ADA:	Yes
H-20:	No
FAA:	No

MADE IN THE USA

DISCONTINUED

P12-RFGC

12 [305] Wide Domestic Grate

Dimensional data (Imperial and [Metric]) are subject to manufacturing tolerances and change without notice. Linear (in[mm]), area (in²[cm²], and weight (lbs[kg])

Back to Index

Please Check ✓	Item No.	Part Number	Item I.D.
	35	302789	P12-RFGC

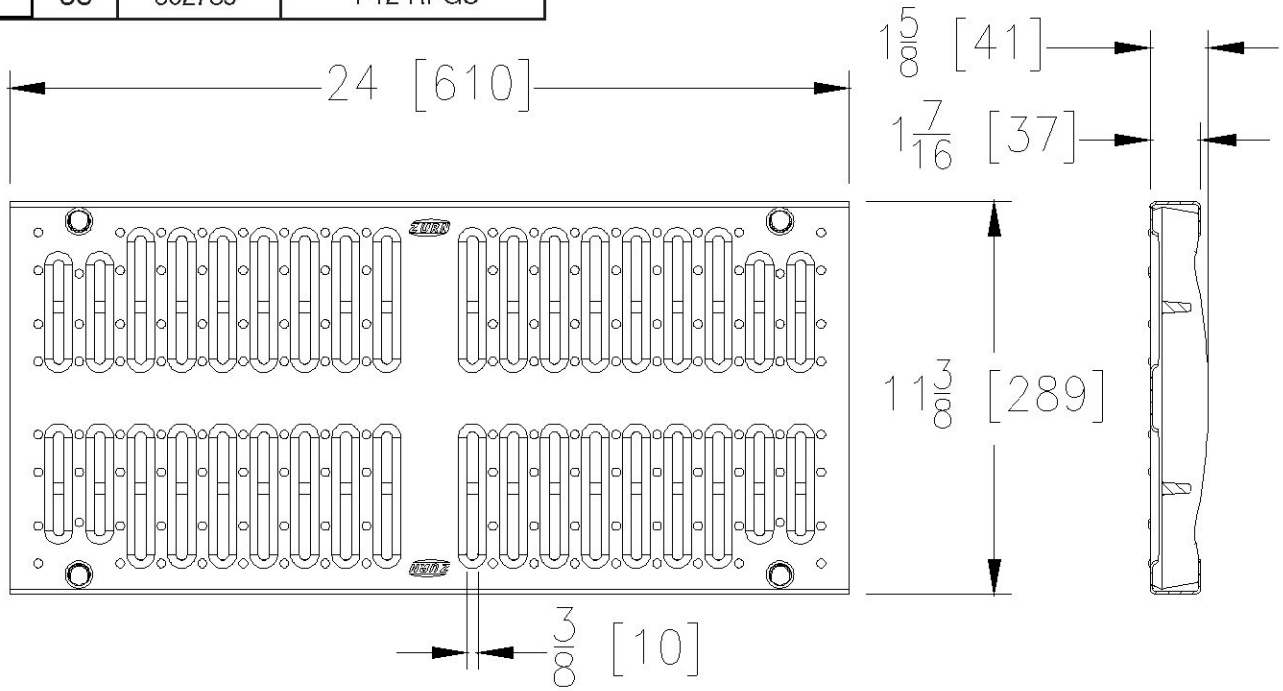

RFGC GRATE ENGINEERING SPECIFICATION: The Zurn P12-RFGC Reinforced Galvanized Steel, is 11-3/8" [289mm] wide X 24" [610mm] long, weighing 16.4 lbs per linear foot [24 kg/m]. The grate has an open area of 20.2 in² per linear foot [428 cm²/m], DIN Rating of C, ANSI Rating of Extra Heavy-Duty, and H-20 Load Rated. Galvanized Skins conforms to ASTM Specification A653, Galvanized Coating designation G60, minimum spangle. Hot Dip Galvanized on Reinforcement conforms to ASTM Specification A123. Ductile Iron conforms to ASTM A536 Grade 80-55-06. For ADA compliance elongated openings must be placed perpindicular to the dominant direnction of travel per ADA guidelines section.

RFGC - Reinforced Galvanzied	
Material: Galvanized Steel & Galvanized Ductile Iron	
DIN Rating:	Class C
Weight:	16.4 lbs/ft. [24 kg/m]
Open Area:	20.2 in²/ft. [428 cm²/m]
ANSI Rating:	Extra Heavy-Duty
Application:	Roadway
Slot Width/Hole Size: 3/8 [10]	
ADA:	Yes
H-20:	Yes
FAA:	No

P12-RFS

12 [305] Wide Domestic Grate

Dimensional data (Imperial and [Metric]) are subject to manufacturing tolerances and change without notice. Linear (in[mm]), area (in²[cm²], and weight (lbs[kg])

Back to Index

Please Check ✓	Item No.	Part Number	Item I.D.
	36	61019	P12-RFS

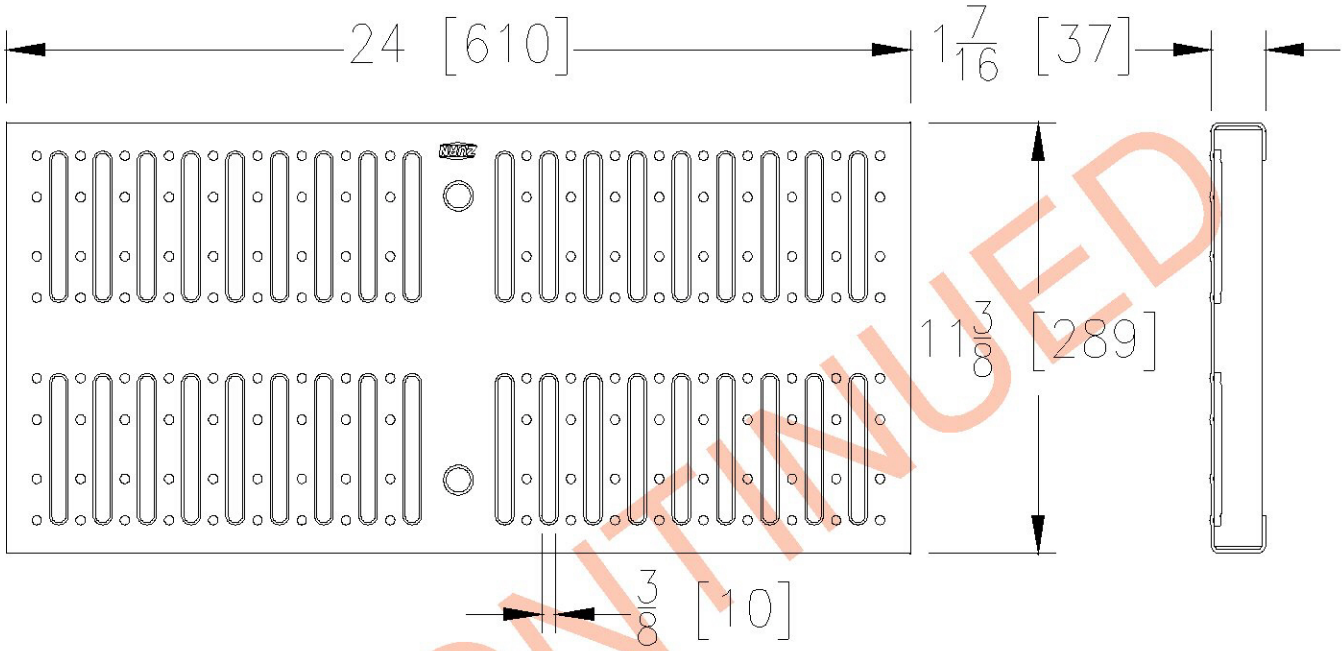

RFS GRATE ENGINEERING SPECIFICATION: The Zurn P12-RFS Reinforced Stainless Steel, is 11-3/8" [289mm] wide X 24" [610mm] long, weighing 12.2 lbs per linear foot [18 kg/m]. The grate has an open area of 25.6 in² per linear foot [542 cm²/m], DIN Rating of B, and ANSI Rating of Medium-Duty. Stainless Steel conforms to ASTM A240 Type 304 (or 316 by request). For ADA compliance elongated openings must be placed perpendicular to the dominant direction of travel per ADA guidelines section.

RFS - Reinforced Slotted	
Material:	Type 304 Stainless Steel
DIN Rating:	Class B
Weight:	12.2 lbs/ft. [18 kg/m]
Open Area:	25.6 in²/ft. [542 cm²/m]
ANSI Rating:	Medium-Duty
Application:	Light Vehicle
Slot Width/Hole Size: 3/8 [10]	
ADA:	Yes
H-20:	No
FAA:	No

MADE IN THE USA

DISCONTINUED

P12-RFSC

12 [305] Wide Domestic Grate

Dimensional data (Imperial and [Metric]) are subject to manufacturing tolerances and change without notice. Linear (in[mm]), area (in²[cm²], and weight (lbs[kg])

Back to Index

Please Check ✓	Item No.	Part Number	Item I.D.
	37	302814	P12-RFSC

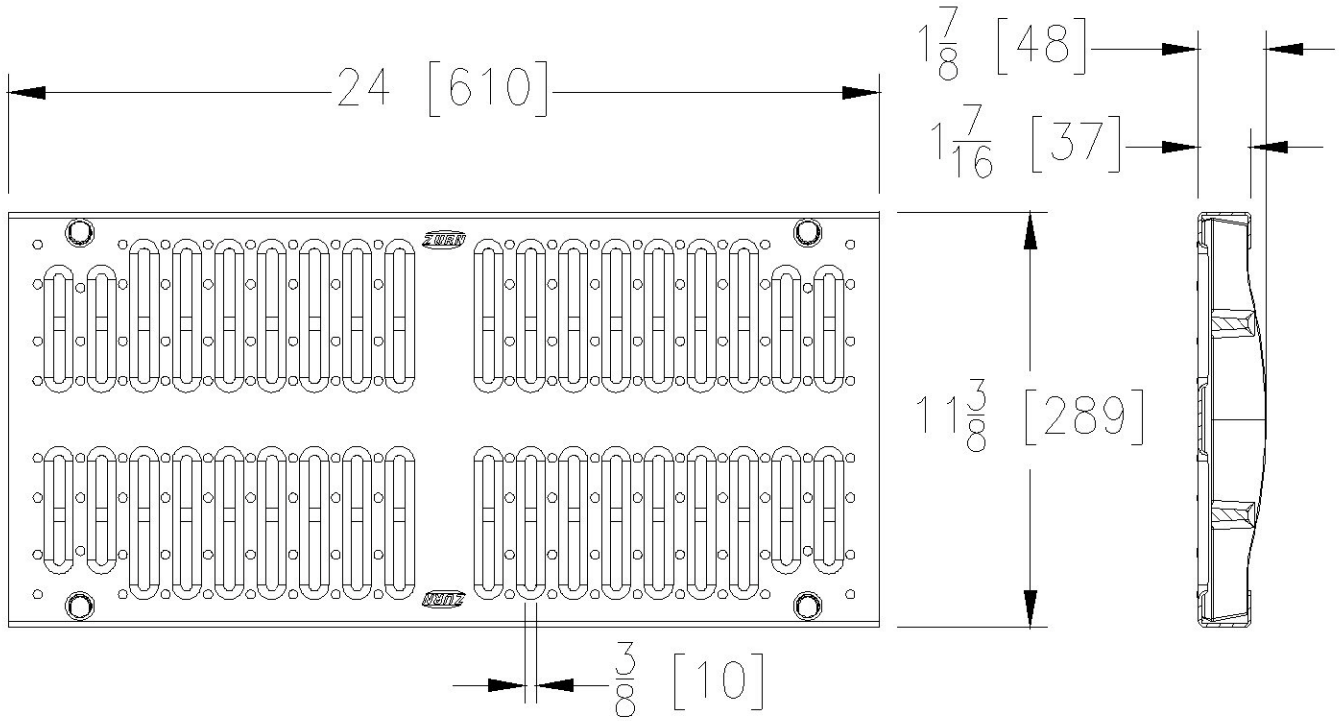

RFSC GRATE ENGINEERING SPECIFICATION: The Zurn P12-RFSC Reinforced Stainless Steel, is 11-3/8" [289mm] wide X 24" [610mm] long, weighing 21.3 lbs per linear foot [32 kg/m]. The grate has an open area of 20.2 in² per linear foot [428 cm²/m], DIN Rating of C, ANSI Rating of Extra Heavy-Duty, and H-20 Load Rated. Stainless Steel Reinforcement conforms to ASTM A315 Grade CF8 Type 304 (or CF8M Type 316 by request). Stainless Steel skins conform to ASTM A240 Type 304 (or 316 by request). For ADA compliance elongated openings must be placed perpendicular to the dominant direction of travel per ADA guidelines section.

RFSC - Reinforced Slotted	
Material:	Type 304 Stainless Steel
DIN Rating:	Class C
Weight:	21.3 lbs/ft. [32 kg/m]
Open Area:	20.2 in²/ft. [428 cm²/m]
ANSI Rating:	Extra Heavy-Duty
Application:	Roadway
Slot Width/Hole Size: 3/8 [10]	
ADA:	Yes
H-20:	Yes
FAA:	No

P12-RPG

12 [305] Wide Domestic Grate

Dimensional data (Imperial and [Metric]) are subject to manufacturing tolerances and change without notice. Linear (in[mm]), area (in²[cm²], and weight (lbs[kg])

Back to Index

Please Check ✓	Item No.	Part Number	Item I.D.
	38	60745	P12-RPG

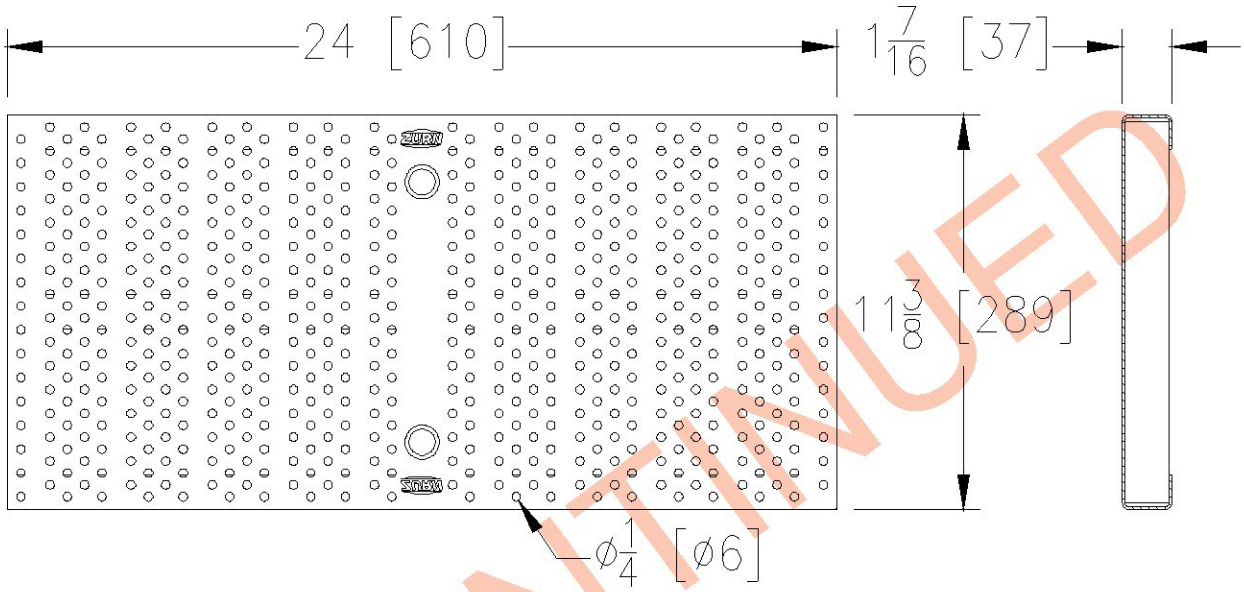

DISCONTINUED

RPG GRATE ENGINEERING SPECIFICATION: The Zurn P12-RPG Reinforced Galvanized Perforated Steel, is 11-3/8" [289mm] wide X 24" [610mm] long, weighing 11.3 lbs per linear foot [17 kg/m]. The grate has an open area of 14.9 in² per linear foot [315 cm²/m], DIN Rating of B, ANSI Rating of Medium-Duty, and ADA Compliant. Carbon Steel conforms to ASTM A36. Galvanized Skin conforms to ASTM Specification A653, Galvanized Coating designation G60, minimum spangle.Galvanizing (hot dip) conforms to ASTM A123.

RPG - Reinforced Perforated	
Material:	Galvanized Steel
DIN Rating:	Class B
Weight:	11.3 lbs/ft. [17 kg/m]
Open Area:	14.9 in²/ft. [315 cm²/m]
ANSI Rating:	Medium-Duty
Application:	Light Vehicle
Slot Width/Hole Size: 1/4 [6]	
ADA:	Yes
H-20:	No
FAA:	No

P12-RPGC

12 [305] Wide Domestic Grate

Dimensional data (Imperial and [Metric]) are subject to manufacturing tolerances and change without notice. Linear (in[mm]), area (in²[cm²], and weight (lbs[kg])

Back to Index

Please Check ✓	Item No.	Part Number	Item I.D.
	39	302813	P12-RPGC

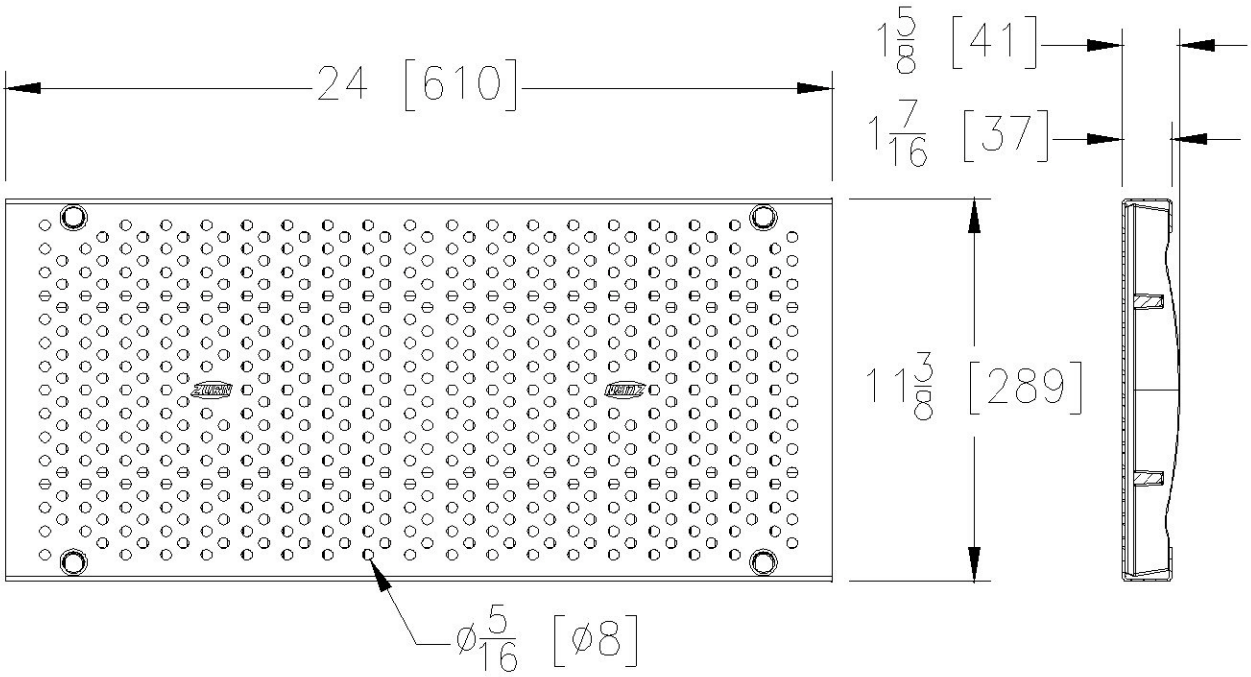

RPGC GRATE ENGINEERING SPECIFICATION: The Zurn P12-RPGC Reinforced Galvanized Perforated Steel, is 11-3/8" [289mm] wide X 24" [610mm] long, weighing 16.0 lbs per linear foot [24 kg/m]. The grate has an open area of 19.2 in² per linear foot [406 cm²/m], DIN Rating of C, ANSI Rating of Extra Heavy-Duty, ADA Compliant, and H-20 Load Rated. Ductile Iron conforms to ASTM A536 Grade 80-55-06. Galvanized Sheet conforms to ASTM Specification A653, Galvanized Coating designation G60, minimum spangle. Galvanizing (Hot Dip) conforms to ASTM Specification A123.

RPGC - Reinforced Perforated	
Material:	Galvanized Steel & Galvanized Ductile Iron
DIN Rating:	Class C
Weight:	16.0 lbs/ft. [24 kg/m]
Open Area:	19.2 in²/ft. [406 cm²/m]
ANSI Rating:	Extra Heavy-Duty
Application:	Roadway
Slot Width/Hole Size: 5/16 [8]	
ADA:	Yes
H-20:	Yes
FAA:	No

Zurn Industries, LLC | **Light Commercial Plumbing Products**
1801 Pittsburgh Avenue, Erie, PA U.S.A. 16502 · Ph. 855-663-9876, Fax 814-454-7929
In Canada | **Zurn Industries Limited**
3544 Nashua Drive, Mississauga, Ontario L4V 1L2 · Ph. 905-405-8272, Fax 905-405-1292
www.zurn.com

Rev. AA
Date: 01/11/16
C.N. No. 133793
Form # FT649

P12-RPGR

12 [305] Wide Galvanized Steel Reinforced
Raised Perforated Anti-Slip ADA Grate

Dimensional data (Imperial and [Metric]) are subject to manufacturing tolerances and change without notice. Linear (in[mm]), area (in²[cm²], and weight (lbs[kg])

Back to Index

Please Check ✓	Item No.	Part Number	Item I.D.
	40	300572	P12-RPGR

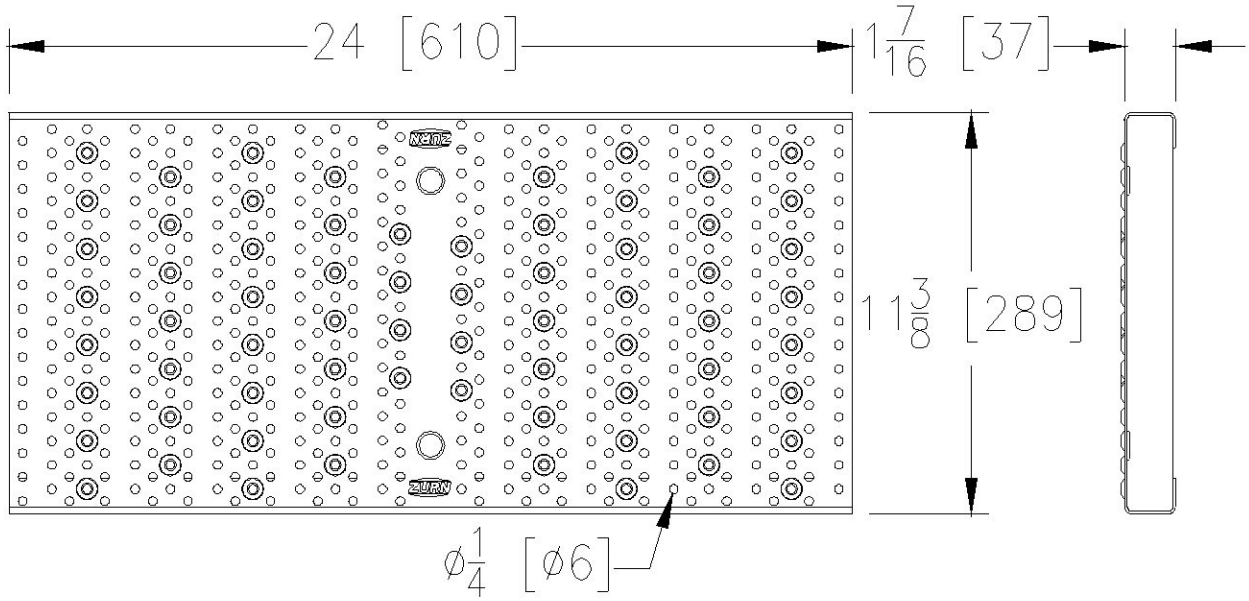

RPGR GRATE ENGINEERING SPECIFICATION: The Zurn P12-RPGR Galvanized Steel Reinforced Raised Perforated Grate, is 11-3/8" [289mm] wide X 24" [610mm] long, weighing 11.3 lbs per linear foot [17 kg/m]. The grate has an open area of 14.9 in² per linear foot [315 cm²/m], DIN Rating of Class B, ANSI Rating of Medium-Duty, and ADA Compliant. Carbon Steel conforms to ASTM A36. Galvanized Skin conforms to ASTM Specification A653, Galvanized Coating designation G60, minimum spangle. Galvanizing (hot dip) conforms to ASTM A123.

RPGR - Raised Perforated	
Material:	Galvanized Steel
DIN Rating:	Class B
Weight:	11.3 lbs/ft. [17 kg/m]
Open Area:	14.9 in²/ft. [315 cm²/m]
ANSI Rating:	Medium-Duty
Application:	Light Vehicle
Slot Width/Hole Size: 1/4 [6]	
ADA:	Yes
H-20:	No
FAA:	No

P12-RPGRC

12 [305] Wide Galvanized Steel Reinforced Raised Perforated Anti-Slip ADA Grate

Dimensional data (Imperial and [Metric]) are subject to manufacturing tolerances and change without notice. Linear (in[mm]), area (in²[cm²], and weight (lbs[kg])

Back to Index

Please Check ✓	Item No.	Part Number	Item I.D.
	41	305024	P12-RPGRC

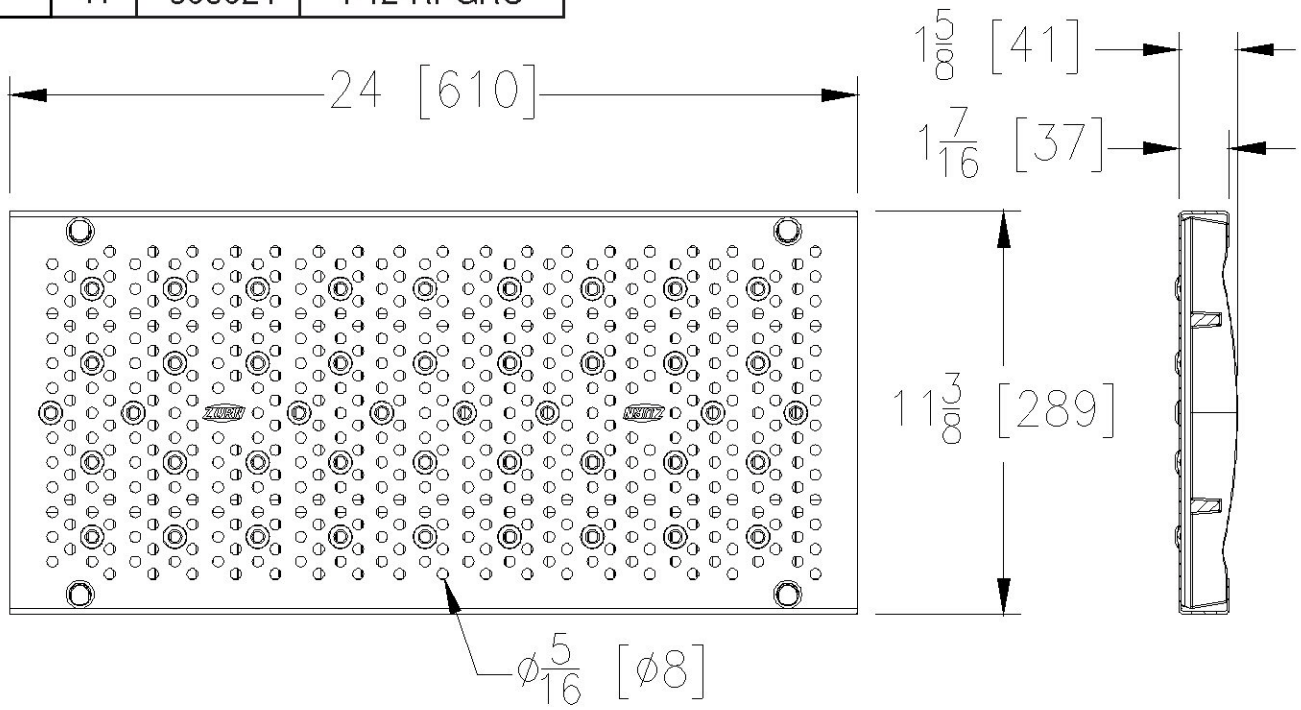

RPGRC GRATE ENGINEERING SPECIFICATION: The Zurn P12-RPGRC Galvanized Steel Reinforced Raised Perforated Grate, is 11-3/8" [289mm] wide X 24" [610mm] long, weighing 16.0 lbs per linear foot [24 kg/m]. The grate has an open area of 19.2 in² per linear foot [406 cm²/m], DIN Rating of Class C, ANSI Rating of Extra Heavy-Duty, ADA Compliant and H-20 Load Rated. Ductile Iron conforms to ASTM A536 Grade 80-55-06. Galvanized Sheet conforms to ASTM Specification A653, Galvanized Coating designation G60, minimum spangle. Galvanizing (Hot Dip) conforms to ASTM A123.

RPGRC - Raised Perforated	
Material:	Galvanized Steel & Galvanized Ductile Iron
DIN Rating:	Class C
Weight:	16.0 lbs/ft. [24 kg/m]
Open Area:	19.2 in²/ft. [406 cm²/m]
ANSI Rating:	Extra Heavy-Duty
Application:	Roadway
Slot Width/Hole Size: 5/16 [8]	
ADA:	Yes
H-20:	Yes
FAA:	No

P12-RPSC

12 [305] Wide Domestic Grate

Dimensional data (Imperial and [Metric]) are subject to manufacturing tolerances and change without notice. Linear (in[mm]), area (in²[cm²], and weight (lbs[kg])

Back to Index

Please Check ✓	Item No.	Part Number	Item I.D.
	42	302785	P12-RPSC

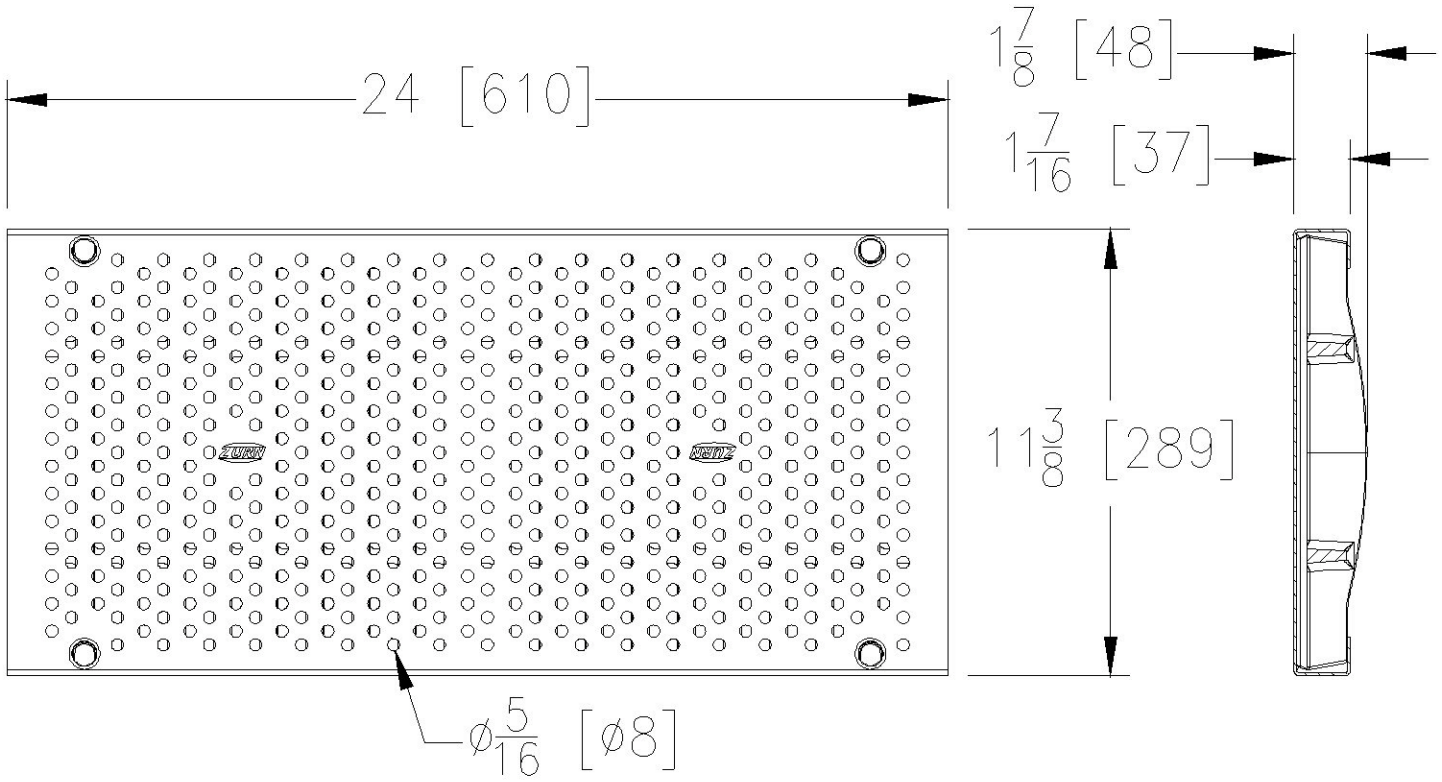

RPSC GRATE ENGINEERING SPECIFICATION: The Zurn P12-RPSC Reinforced Perforated Stainless Steel, is 11-3/8" [289mm] wide X 24" [610mm] long, weighing 21.0 lbs per linear foot [31 kg/m]. The grate has an open area of 19.2 in² per linear foot [406 cm²/m], DIN Rating of C, ANSI Rating of Extra Heavy-Duty, ADA Compliant, and H-20 Load Rated. Stainless Steel conforms to ASTM A240 Grade CF8 Type 304 (or 316 by request).

RPSC - Reinforced Perforated	
Material:	Type 304 Stainless Steel
DIN Rating:	Class C
Weight:	21.0 lbs/ft. [31 kg/m]
Open Area:	19.2 in²/ft. [406 cm²/m]
ANSI Rating:	Extra Heavy-Duty
Application:	Roadway
Slot Width/Hole Size: 5/16 [8]	
ADA:	Yes
H-20:	Yes
FAA:	No

Zurn Industries, LLC | **Light Commercial Plumbing Products**
1801 Pittsburgh Avenue, Erie, PA U.S.A. 16502 · Ph. 855-663-9876, Fax 814-454-7929
In Canada | **Zurn Industries Limited**
3544 Nashua Drive, Mississauga, Ontario L4V 1L2 · Ph. 905-405-8272, Fax 905-405-1292
www.zurn.com

Rev. AA
Date: 01/11/16
C.N. No. 133793
Form # FT649

P12-RPSR

12 [305] Wide Stainless Steel Reinforced Raised Perforated Anti-Slip ADA Grate

Dimensional data (Imperial and [Metric]) are subject to manufacturing tolerances and change without notice. Linear (in[mm]), area (in²[cm²], and weight (lbs[kg])

Back to Index

Please Check ✓	Item No.	Part Number	Item I.D.
	43	300572	P12-RPSR

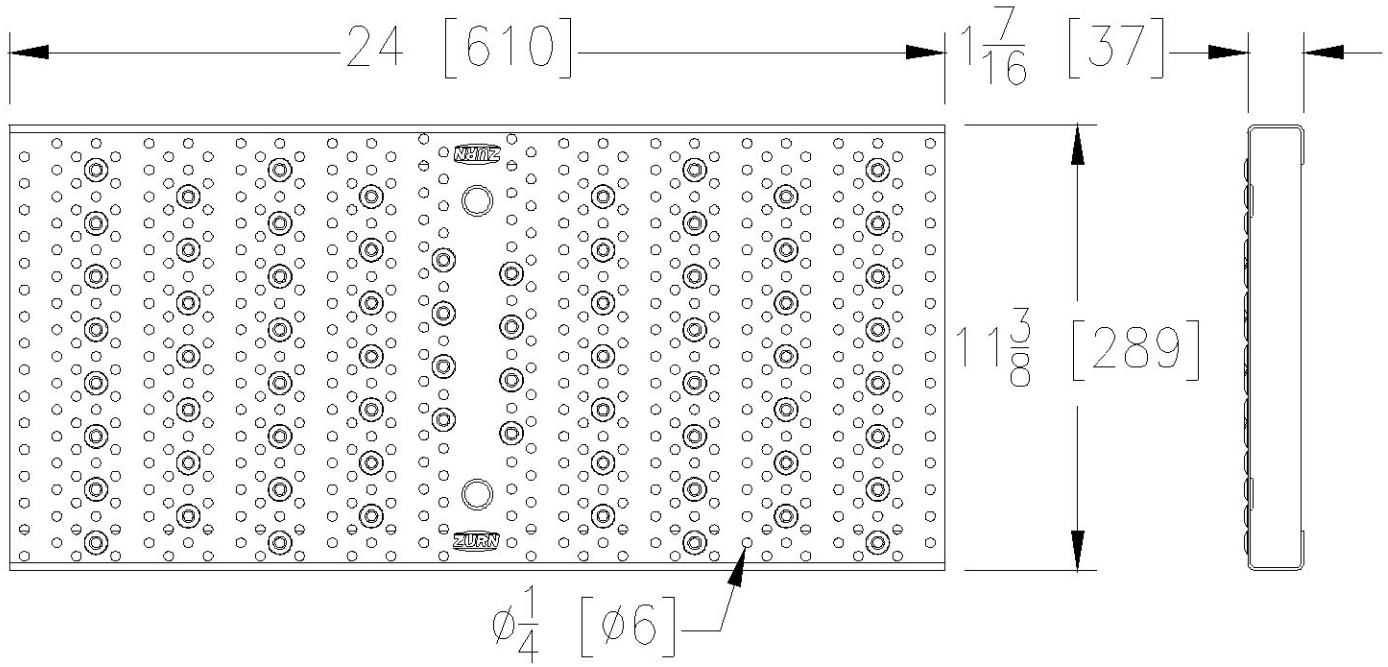

RPSR GRATE ENGINEERING SPECIFICATION: The Zurn P12-RPSR Stainless Steel Reinforced Raised Perforated Grate, is 11-3/8" [289mm] wide X 24" [610mm] long, weighing 11.6 lbs per linear foot [17 kg/m]. The grate has an open area of 14.9 in² per linear foot [315 cm²/m], DIN Rating of Class B, ANSI Rating of Medium-Duty, and ADA Compliant. Stainless Steel conforms to ASTM A240 Grade CF8 Type 304 (or 316 by request).

RPSR - Raised Perforated	
Material:	Stainless Steel
DIN Rating:	Class B
Weight:	11.6 lbs/ft. [17 kg/m]
Open Area:	14.9 in²/ft. [315 cm²/m]
ANSI Rating:	Medium-Duty
Application:	Light Vehicle
Slot Width/Hole Size:	1/4 [6]
ADA:	Yes
H-20:	No
FAA:	No

P12-RPSRC

12 [305] Wide Stainless Steel Reinforced Raised Perforated Anti-Slip ADA Grate

Dimensional data (Imperial and [Metric]) are subject to manufacturing tolerances and change without notice. Linear (in[mm]), area (in²[cm²], and weight (lbs[kg])

Back to Index

Please Check ✓	Item No.	Part Number	Item I.D.
	44	305025	P12-RPSRC

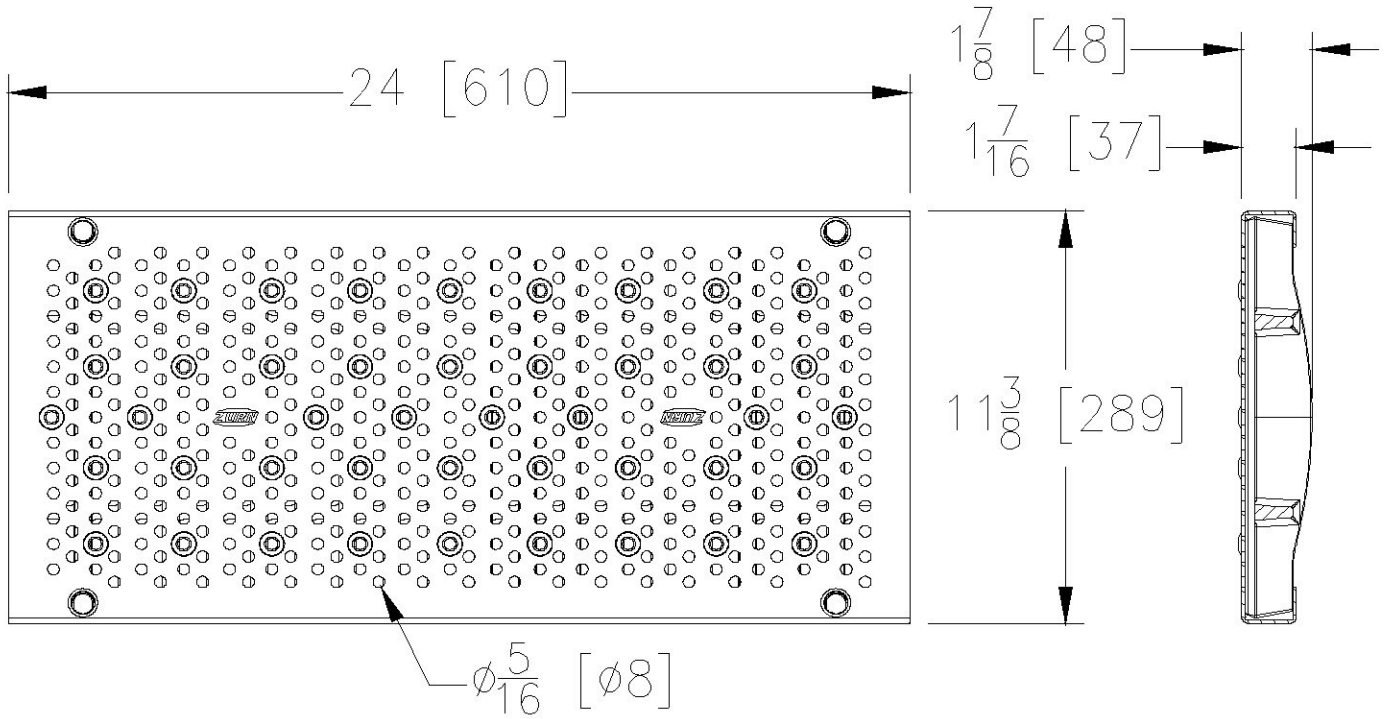

RPSRC GRATE ENGINEERING SPECIFICATION: The Zurn P12-RPSRC Stainless Steel Reinforced Raised Perforated Grate, is 11-3/8" [289mm] wide X 24" [610mm] long, weighing 21.0 lbs per linear foot [31 kg/m]. The grate has an open area of 14.9 in² per linear foot [315 cm²/m], DIN Rating of Class C, ANSI Rating of Extra Heavy-Duty, ADA Compliant, and H-20 Load Rated. Stainless Steel conforms to ASTM A351 Grade CF8 Type 304 (or Grade CF8M Type 316 by request). Stainless Steel skins conforms to ASTM A240 Type 304 (or 316 by request).

RPSRC - Raised Perforated	
Material:	Stainless Steel
DIN Rating:	Class C
Weight:	21.0 lbs/ft. [31 kg/m]
Open Area:	14.9 in²/ft. [315 cm²/m]
ANSI Rating:	Extra Heavy-Duty
Application:	Roadway
Slot Width/Hole Size: 5/16 [8]	
ADA:	Yes
H-20:	Yes
FAA:	No

P12-SBG-L

12 [305] Wide Domestic Grate

Dimensional data (Imperial and [Metric]) are subject to manufacturing tolerances and change without notice. Linear (in[mm]), area (in²[cm²], and weight (lbs[kg])

Back to Index

Please Check ✓	Item No.	Part Number	Item I.D.
	45	94015	P12-SBG-L

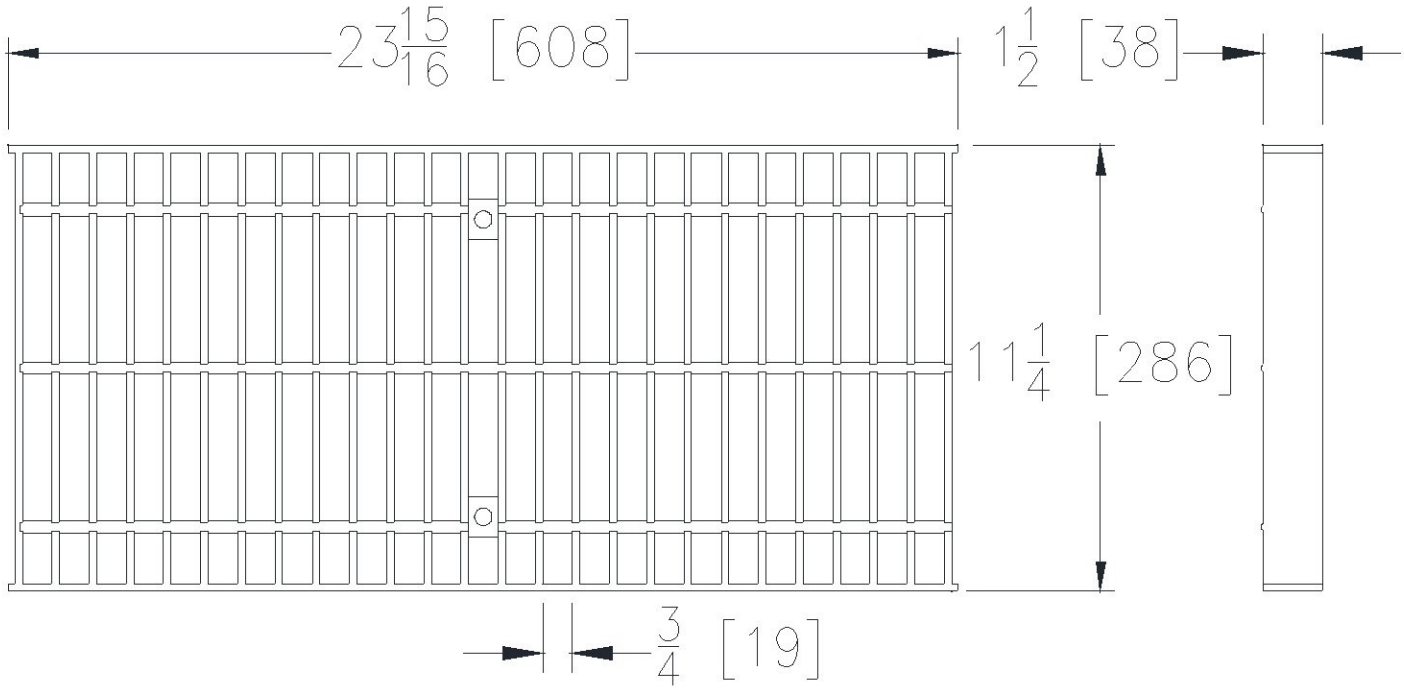

SBG-L GRATE ENGINEERING SPECIFICATION: The Zurn P12-SBG-L Stainless Steel Slotted Bar Grate, is 11-1/4" [286mm] wide X 23-15/16" [608mm] long, weighing 13.9 lbs per linear foot [21 kg/m]. The grate has an open area of 101.9 in² per linear foot [2157 cm²/m], DIN Rating of C, ANSI Rating of Heavy-Duty, H-20 Load Rated. Stainless Steel conforms to ASTM A240 Grade CF8 Type 304 (or 316 by request).

SBG-L - Steel Bar	
Material:	Type 304 Stainless Steel
DIN Rating:	Class C
Weight:	13.9 lbs/ft. [21 kg/m]
Open Area:	101.9 in²/ft. [2157 cm²/m]
ANSI Rating:	Heavy-Duty
Application:	Vehicle & Truck
Slot Width/Hole Size: 3/4 [19]	
ADA:	No
H-20:	Yes
FAA:	No

MADE IN THE USA

Zurn Industries, LLC | **Light Commercial Plumbing Products**
1801 Pittsburgh Avenue, Erie, PA U.S.A. 16502 · Ph. 855-663-9876, Fax 814-454-7929
In Canada | **Zurn Industries Limited**
3544 Nashua Drive, Mississauga, Ontario L4V 1L2 · Ph. 905-405-8272, Fax 905-405-1292
www.zurn.com

Rev. AA
Date: 01/11/16
C.N. No. 133793
Form # FT649

P12-SSCD

12 [305] Wide Cover

Dimensional data (Imperial and [Metric]) are subject to manufacturing tolerances and change without notice. Linear (in[mm]), area (in²[cm²], and weight (lbs[kg])

Back to Index

Please Check ✓	Item No.	Part Number	Item I.D.
	46	60745	P12-SSCD

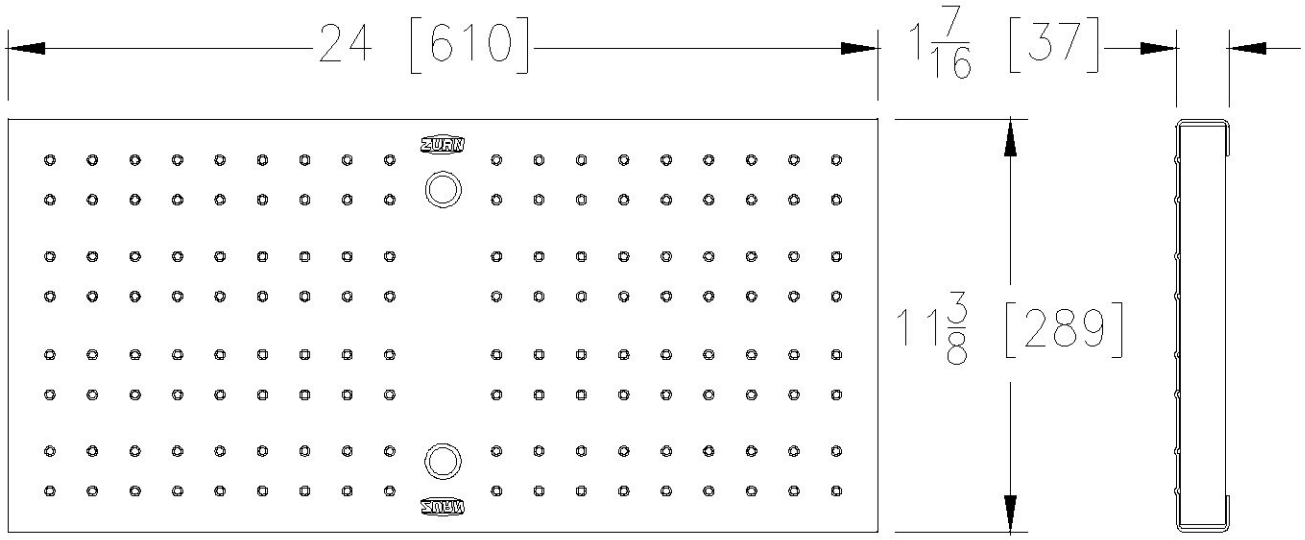

SSCD COVER ENGINEERING SPECIFICATION: The Zurn P12-SSCD Reinforced Solid Cover, Stainless Steel, is 11-3/8" [289mm] wide X 24" [610mm] long, weighing 11.7 lbs per linear foot [17 kg/m]. The cover has a DIN Rating of B, ANSI Rating of Medium-Duty and is ADA Compliant. Stainless Steel conforms to ASTM A351 Grade CF8 (Type 304).

SSCD - Stainless Steel Cover	
Material:	Type 304 Stainless Steel
DIN Rating:	Class B
Weight:	11.7 lbs/ft. [17 kg/m]
Open Area:	N/A
ANSI Rating:	Medium-Duty
Application:	Light Vehicle
Slot Width/Hole Size: N/A	
ADA:	Yes
H-20:	No
FAA:	No

MADE IN THE USA

Zurn Industries, LLC | **Light Commercial Plumbing Products**
1801 Pittsburgh Avenue, Erie, PA U.S.A. 16502 · Ph. 855-663-9876, Fax 814-454-7929
In Canada | **Zurn Industries Limited**
3544 Nashua Drive, Mississauga, Ontario L4V 1L2 · Ph. 905-405-8272, Fax 905-405-1292
www.zurn.com

Rev. AA
Date: 01/11/16
C.N. No. 133793
Form # FT649