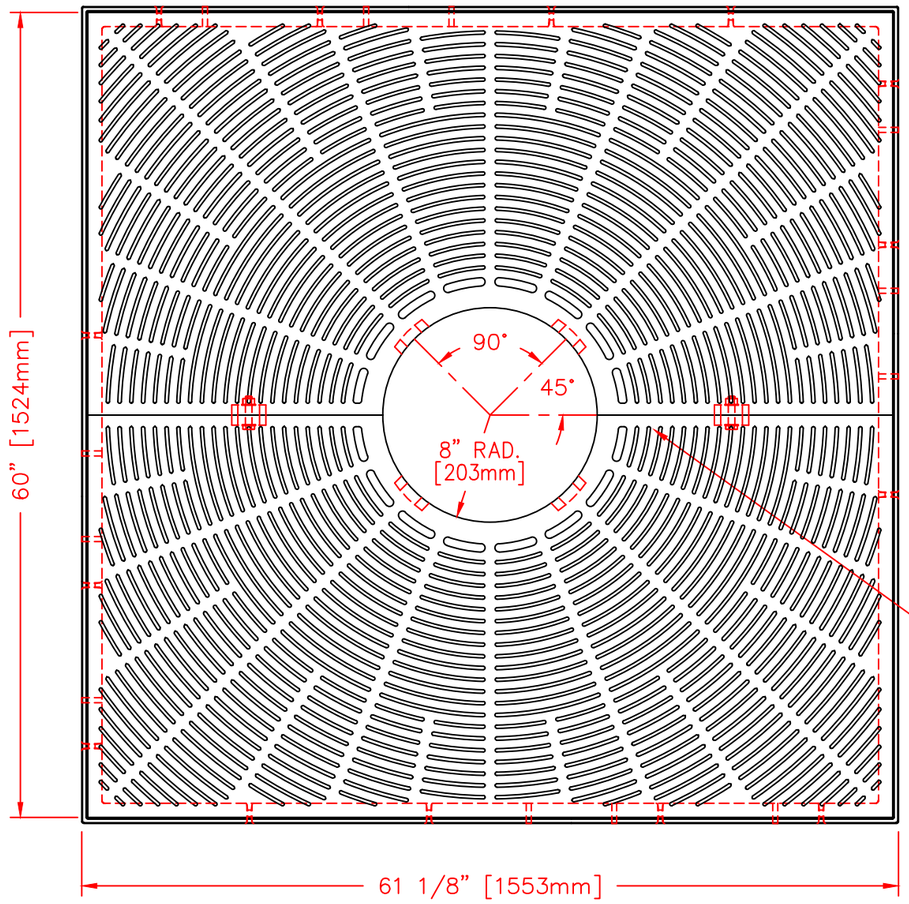

TREE GRATE HALVES BOLTED TOGETHER w/ (2) 1/2–13 X 3" STNLS. STL. HEX. BOLT AND HEX. NUT w/ WASHERS

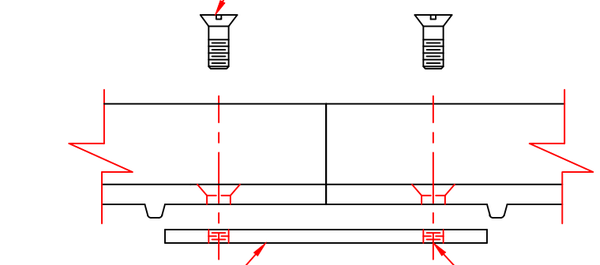

ASSEMBLY DETAIL
SCALE 1:3

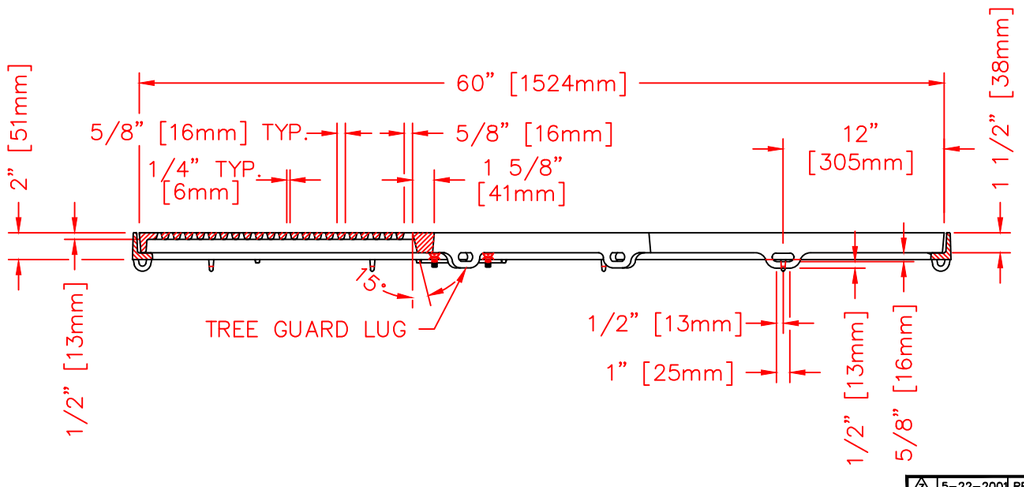

Supplied By:

TRENCHDRAIN SUPPLY

877-903-7246

www.trenchdrainsupply.com

NOTE: FRAME CROSS BAR REQUIRES REMOVAL AFTER INSTALLATION.
ALL DIMENSIONS ARE SHOWN IN ENGLISH AND [METRIC].

COMPONENT NO'S: (4) 5'–0" FRAME 8500–6060; (2) TREE GRATE 8713–0006

MATERIAL: CAST GRAY IRON ASTM A–48, CLASS 35B

FINISH: NOT PAINTED

WEIGHT: 500#/SET

3	5–22–2001	RELOCATED LUGS	LMA
2	9–5–2000	ADDED MATL TO TREE OPENING	LMA
1	7–17–97	REVISE LUGS ON FRAME	CSK
	DATE	REVISION	INT

DR.	E. REMME	SCALE 1'=1'–0"	TITLE: R–8713 5'–0" SQUARE TREE GRATE & FRAME
CH.			
APP.		DIM CHK.	NEENAH FOUNDRY COMPANY NEENAH WISCONSIN 54956 — NF- 8713 095 B
DATE	4–01–96		

CAD DWG. REF: 8713 095.DWG– 3